DATASHEET

FX100-30

Geolux

Distributed by AKRIBIS

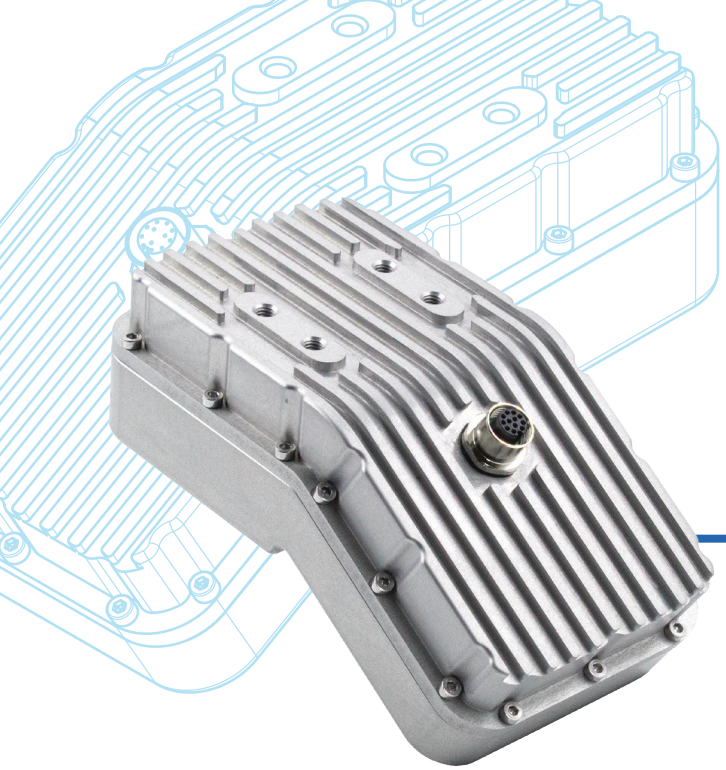

HIGH-PRECISION NON-CONTACT OPEN CHANNEL FLOW VELOCITY & LEVEL METER FX100

- Contactless measurement of surface velocity and water level
- Integrated discharge (flowrate) calculation
- 4D radar processing increases sensitivity while eliminating environmental disturbances
- Robust, compact, IP68 aluminium or stainless steel enclosure

Applications

- Early flood warning systems
- Flow monitoring in irrigation channels
- Accurate discharge monitoring in rivers
- Sewage and waste water discharge measurement

Product Description

The Geolux FX100 is an integrated instrument utilizing advanced FMCW 4D surface velocity radar and FMCW water level radar meter. Designed for non-contact measurement applications, the FX100 enables rapid deployment above water surfaces while minimizing maintenance requirements.

The FX100 is based on the advanced 4D radar processing that delivers superior performance compared to conventional Doppler-based surface velocity radars. While traditional Doppler sensors are susceptible to measurement degradation from ambient interference, precipitation, and structural vibration, the FX100's signal processing architecture ensures consistent, high-accuracy velocity measurements under all environmental conditions.

Calculation of the total flow discharge is internally implemented within the instrument by combining surface velocity measurement, water level measurement, and a configured cross-section of the river or channel. Defining the measurement parameters such as profile cross-section, material of the edges, location of the sensor above the water, and all other instrument settings can be easily set with the Geolux configuration application using any available communication interface.

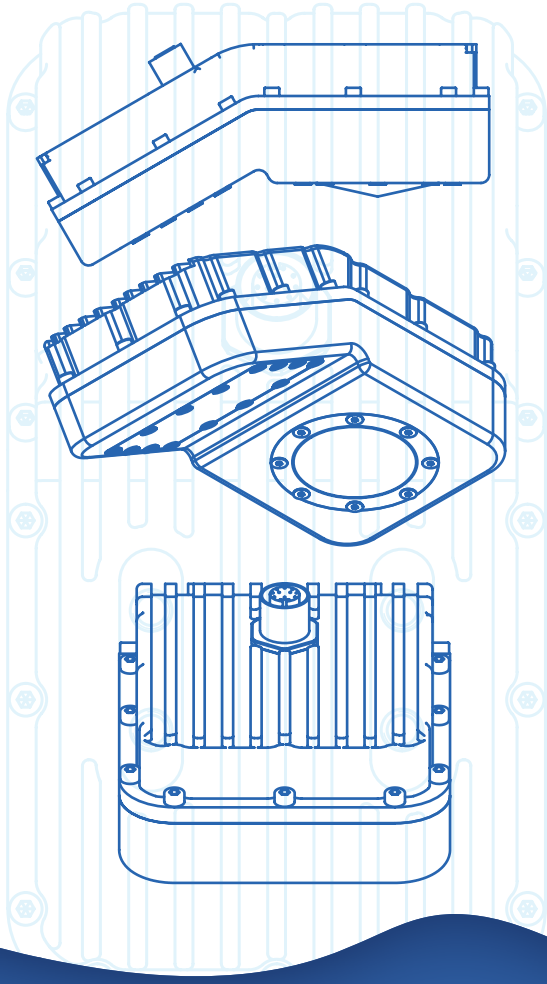

FX100

Detailed Specifications

Detection Distance	15 m / 30 m / 35 m
Speed Range	0.02 m/s to 16 m/s
Speed Resolution	0.001 m/s
Speed Accuracy	1% of measured value (in full measurement range)
Level Resolution	1 mm
Level Accuracy	± 2 mm
Sampling Rate	1 sps
IP Rating	IP68
Interfaces	RS-232 / NMEA RS-485 / Modbus Rtu SDI-12 Analog 4-20 mA
Connector	M12 circular 12-pin
Input Voltage	9 to 27 VDC
Power Consumption	1100 mW operational 30 mW standby
Maximal Current	< 750 mA
Operating Temperature Range	-40°C to +85°C
Operating Humidity Range	0 – 100% RH

FCC & CE **APPROVED**
MADE IN **EU**

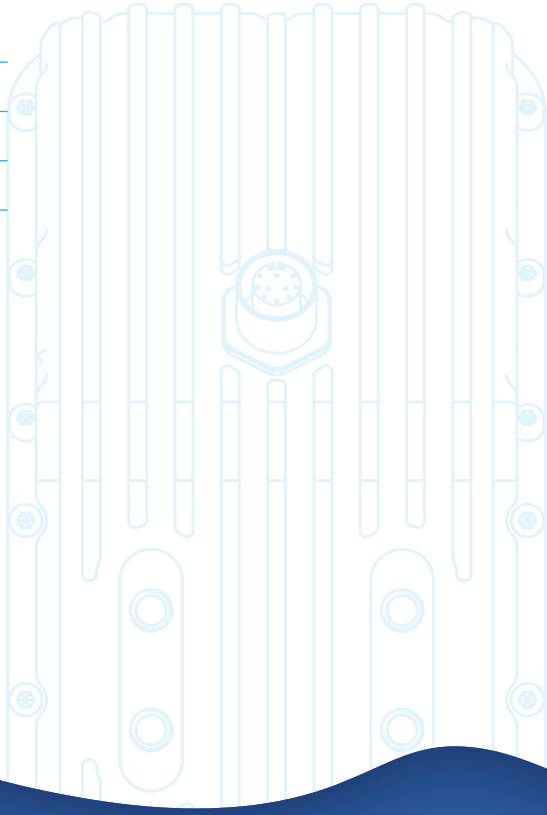

For more information, contact us:
Phone: +385 1 6701 241
E-mail: geolux@geolux.hr

AKRIBIS · www.akribis.info · contacto@akribis.info

Geolux
www.geolux-radars.com