DOCUMENT

Europa-4520

Isotech

Distributed by AKRIBIS

The Source for Calibration Professionals

User Maintenance Manual

EUROPA 4520 BASIC & SITE

Isothermal Technology Limited, Pine Grove, Southport, Merseyside, PR9 9AG, England
Telephone: +44 (0)1704 543830 Fax: +44 (0)1704 544799 Email: info@isotech.co.uk Website: www.isotech.co.uk

AKRIBIS · www.akribis.info · contacto@akribis.info

Guarantee

©Isothermal Technology Limited

This instrument has been manufactured to exacting standards and is guaranteed for twelve months against electrical break-down or mechanical failure caused through defective material or workmanship, provided the failure is not the result of misuse.

In the event of failure covered by this guarantee, the instrument must be returned, carriage paid, to the supplier for examination and will be replaced or repaired at our option.

FRAGILE CERAMIC AND/OR GLASS PARTS ARE NOT COVERED BY THIS GUARANTEE INTERFERENCE WITH OR FAILURE TO PROPERLY MAINTAIN THIS INSTRUMENT MAY INVALIDATE THIS GUARANTEE

The company is always willing to give technical advice and assistance where appropriate. Equally, because of the programme of continual development and improvement we reserve the right to amend or alter characteristics and design without prior notice. This publication is for information only.

This handbook contains information that has been reproduced with the kind permission of Eurotherm. Such data is subject to the following notice.

ISOTECH

Isothermal Technology Limited
Pine Grove, Southport, Merseyside, PR9 9AG, England
Telephone: +44 (0)1704 543830 / Fax: +44 (0)1704 544799
Email: info@isotech.co.uk / Website: www.isotech.co.uk

Contents

1 UNPACKING AND INITIAL INSPECTION 5

2 BEFORE YOU USE THE EQUIPMENT 6

3 SUMMARY OF SYMBOLS 7

4 ELECTRICITY SUPPLY 8

5 ⚠ THE UNIT MUST BE EARTHED 9

6 REGULATORY INFORMATION 10

7 ⚠ CAUTIONARY NOTE 11

8 ⚠ SAFETY WARNINGS 12

8.1 ENVIRONMENTAL CONDITIONS 12
8.2 DO NOT MODIFY OR DISASSEMBLE 12
8.3 BEWARE OF ELECTRICAL CONSIDERATIONS 12
8.4 BE CAREFUL WHERE IT IS USED 12
8.5 BE CAREFUL WITH EXTREMES OF TEMPERATURE 12
8.6 BE CAREFUL WITH INSERTS 12

9 CONSIDER THE ENVIRONMENT 14

10 INTRODUCTION 15

10.1 COMPARISON CALIBRATION 15
10.2 BASIC OPERATION 15
10.3 SITE OR SELF-CONTAINED CALIBRATORS 15
10.4 EXTERNAL STANDARDS + BASIC 16
10.5 ADVANCED CALIBRATORS 16

11 MODE OF OPERATION 17

11.1 METAL BLOCK BATH 17
11.2 BLACKBODY SOURCE 17
11.3 SURFACE SENSOR CALIBRATION 17
11.4 STIRRED LIQUID BATH 18
11.5 ITS-90 FIXED POINT CALIBRATION 18
11.6 ISOTECH BASIC DRY BLOCK INTERFACE 19
11.7 ISOTECH SITE DRY BLOCK INTERFACE 20

12 SPECIFICATION 21

13 BEST PERFORMANCE GRAPH 22

14 OPERATING THE MODEL 23

14.1 FRONT PANEL LAYOUT 23
14.1.1 The Temperature Controller 23
14.1.2 Altering the Setpoint 23
14.2 CONTROLLER FEATURES 23
14.2.1 Setpoint Ramp Rate 23
14.2.2 Instrument Address 24
14.3 MONITORING THE CONTROLLER STATUS 24
14.3.1 Units 24
14.4 THE TEMPERATURE INDICATOR: SITE MODELS ONLY 25
14.5 CONNECTING TEMPERATURE SENSORS 25
14.5.1 Platinum Resistance Thermometers, PRTs 25

14.5.2 Input Connections 25
14.5.3 Connecting Thermocouples 25
14.5.4 Setting the Input Type 25
14.6 ENABLING/DISABLING CUSTOM CALIBRATION 26
14.7 INSTRUMENT ADDRESS 26
14.8 MONITORING THE INDICATOR STATUS 27
14.8.1 Units 27
14.9 INDICATOR OPERATION 27

15 CALIBRATION DATA EXAMPLE 28

15.1 CONNECTING A 4-20MA CURRENT TRANSMITTER 28
15.2 USING THE CURRENT LOOP INTERFACE 935-06-161 WITH THE SITE MODEL 30
15.3 TESTING THERMAL SWITCHES 31
15.4 PROCEDURE FOR THE REVERSAL OF THE POLARITY FOR THE SWITCH CONTACT FEATURE 31
15.5 SELECTING INPUT TYPE 31

16 USING THE PC INTERFACE 32

16.1 CONNECTIONS 32
16.2 PROTOCOL 32

17 CAL NOTEPAD 33

17.1 DEVELOPMENT 33
17.2 ISOTECH I-CAL EASY LOG 34

18 DIAGNOSTIC ALARMS 35

19 APPENDIX 1: INDICATOR CONFIGURATION (REFERENCE ONLY) 36

1 Unpacking And Initial Inspection

Our Packing Department uses custom designed packaging to send out your unit, but as accidents can still happen in transit, you are advised, after unpacking the unit, to inspect it for any sign of shipping damage and confirm that your delivery is in accordance with the packing check list. If you find any damage or that part of the delivery is missing notify us or our agent and the carrier immediately. If the unit is damaged you should keep the packing for possible insurance assessment.

2 Before You Use the Equipment

Please read the handbook and familiarise yourself with all warnings, hazards and safety information. Regularly inspect the equipment, accessories and electrical leads. Do not use if there is any sign of damage. Keep the equipment clean, only use a damp cloth. Do not use solvents or allows liquids to enter the case.

3 Summary of Symbols

	ISO3864 – Caution, read the entire manual before use
	IEC 417 – Caution, hot surface (risk of burn)
O	Off
I	On
	Waste Electrical and Electronic Equipment (WEEE directive) symbol
	Complies with European regulations (CE mark)
UK CA	Complies with United Kingdom regulations (UKCA mark)
	USB symbol
	Ethernet RJ45 symbol
	Risk of Electrical Shock
I O I O I	RS422 Serial Port

4 Electricity Supply

Before connecting to the electricity supply please familiarise yourself with the parts of the manual relevant to your model.

Your unit's supply voltage requirement is specified on a label on the instrument along with the serial number. Only connect to a power supply matching the requirement stated on the equipment.

5 ⚠ The Unit Must Be Earthed

This equipment is a Class 1 Appliance and must be earthed (grounded). Use the supplied power cord and plug it directly into an AC outlet with a protective earth.

If using an alternative cord ensure it is of adequate rating.

If fitting a plug to the cable we have supplied the cable is colour coded as follows:

Colour	Function
Green/yellow	Earth (Ground)
Brown	Live (line)
Blue	Neutral

Do not use the equipment if it is not correctly earthed. If in doubt consult Isothermal Technology Ltd or a qualified electrician.

6 Regulatory Information

This product complies with the Essential Protection Requirements of the following Directives:

Electromagnetic Compatibility (EMC): EMC Directive 2014/30/EU
To Harmonised Standard: EN 61326-1:2013
Low Voltage Directive (LVD): LVD Directive 2014/35/EU
To Harmonised Standard: BS EN 61010-1:2010

To ensure compliance please ensure that connecting leads are fully screened.

This product conforms with Directive 2011/65/EU of the European Parliament and of the Council of 8 June 2011 as amended by (EU) 2015/863 on the restriction of the use of certain hazardous substances in electrical and electronic equipment as listed in Article 4.

7 ⚠ Cautionary Note

Operators of this equipment should be adequately trained in the handling of hot and cold items. It is important the user has been trained about the selection and use of liquids over a wide temperature range. It is expected that personnel using this equipment will be competent with the management of apparatus which may be powered or under extremes of temperature and are able to appreciate the hazards which may be associated with and the precautions to be taken with, such equipment.

8 ⚠ Safety Warnings

8.1 Environmental Conditions

- Operating temperature: 5-40°C (41-122°F)
- Relative Humidity: 5-80% - non-condensing

8.2 Do Not Modify or Disassemble

- Do not use the apparatus for jobs other than those for which it was designed, i.e., the calibration of thermometers
- There are no user serviceable parts inside. Do not dismantle or modify the apparatus. For repair information contact Isothermal Technology Ltd
- For equipment with fans, the fan should be kept free from dust build up; a soft brush or vacuum cleaner may be used on the external grill

8.3 Beware Of Electrical Considerations

- The equipment is for installation category II (transient voltages) and pollution degree 2, BSEN61010-1
- Sensor Input Connection must never exceed 30V with reference to ground
- Thermostat test inputs should be voltage free: isolate from any voltage source during test

8.4 Be Careful Where It Is Used

- The equipment is not for use in hazardous areas or in an environment close to flammable materials or gases
- The equipment must be used on a flat level surface, with adequate space around it for air flow and avoid blocking ventilation slots
- Ensure free space above the unit to avoid risk of burn or fire
- The equipment should only be used indoors
- Site in a way that allows access to the power switch, and to allow the cable to be disconnected
- Avoid excessive heat, humidity, dust and vibration ensuring it will not be subjected to dripping or splashing liquids
- Do no use at altitudes >2000 meters
- Do not use in corrosive or explosive atmospheres

8.5 Be Careful with Extremes of Temperature

- In normal use the calibration volume, inserts and probes will become very hot and present a burn hazard
- Do not remove inserts, probes or handle the equipment when it is hot or cold.
- Allow the equipment and accessories to reach a temperature between ambient and 70°C before switching off or storing the equipment in its case
- Do not use the equipment outside its recommended temperature range
- Operating the equipment at extremes of temperature for extended periods may call for early replacement of the heating assembly
- Wear appropriate protective clothing

8.6 Be Careful with Inserts

- Only use inserts supplied with, or ordered specifically for, this model
- Do not handle inserts while they are very hot or cold
- Inserts for low temperature models may melt and cause a fire if used in high temperature models
- Only use Isotech inserts which are specially treated to avoid them from becoming stuck in the calibration volume

- Do not use powders, liquids or compounds in the insert; this may lead to the insert or probes becoming stuck

9 Consider The Environment

The equipment should be recycled or disposed of in a proper way; following the Waste Electrical and Electronic Equipment (WEEE) directive

10 Introduction

The purpose of the Europa 4520 models is to provide an adjustable isothermal enclosure for calibration purposes. It has been designed to be rugged and easily maintained.

The isothermal enclosure consists of a fixed heater block into which an insert can be placed. Temperature sensors for calibration are placed in suitably drilled holes in the insert. The replaceable inserts enable a variety of items to be calibrated.

Additionally, there are accessories to allow the calibration of surface sensors and also infrared thermometers.

The heater block houses a heater and the control sensor used by the temperature controller to sense the block temperature.

There are two electrically driven fans in the unit. One runs continuously and cools the electronics in the instrument and the other is switched to cool the block when the set temperature is lower than the block temperature.

10.1 Comparison Calibration

By definition, one compares industrial thermometers to a calibrated standard. There are three methods commonly used.

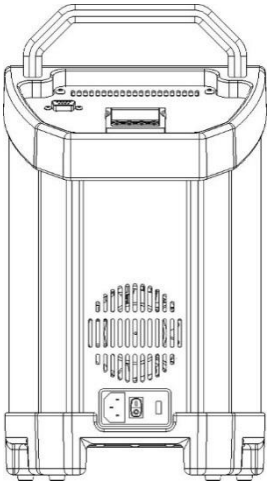

10.2 Basic Operation

Using the controller as the "calibrated standard". This method means that the complete bath is calibrated by comparing the controller reading to a calibrated standard placed in the bath.

This is a common method but is unsafe since the control sensor is

a) inaccessible
b) in the wrong place to give correct temperature of the insert

For these reasons it fails to satisfy ISO9000 and gives large uncertainties.

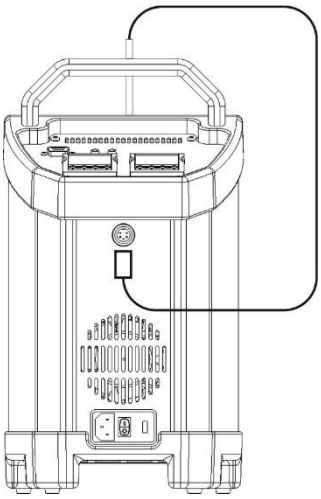

10.3 Site or Self-Contained Calibrators

In these an indicator and external calibrated sensor are used to measure the temperature of the insert. This arrangement gives good results and traceability. To recalibrate however it does mean sending the whole calibrator back to the calibration laboratory. The calibrator is self-contained, self-sufficient and meets ISO9000 requirements.

10.4 External Standards + Basic

Here a separate indicator and calibrated sensor are used to measure the inserts temperature. With a suitable indicator such as the Isotech milliK this gives the most accurate and reliable results, depending on the indicator.

It means that the calibrator does not need calibrating; only the indicator and its calibrated sensor need re-calibration. One indicator may be used with a range of blocks. This method also meets ISO9000 requirements.

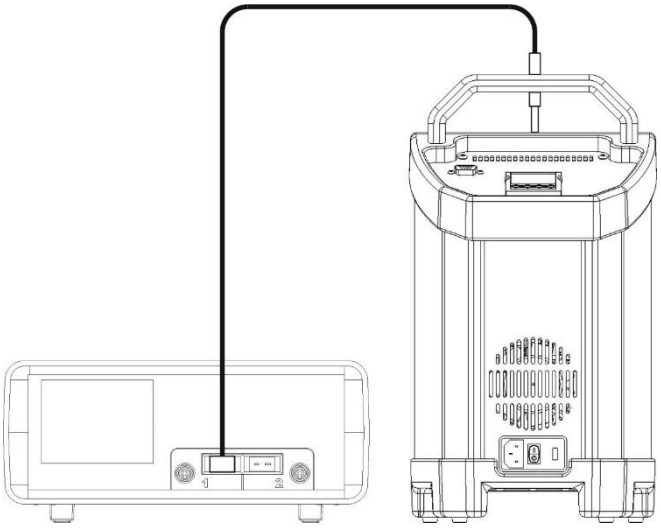

10.5 ADVANCED Calibrators

The ADVANCED model includes an indicator with channels for both the test thermometers and an external calibrated sensor used to measure the temperature of the insert. This allows best practice calibration with established traceability and uncertainty. To recalibrate however, it does mean sending the whole calibrator back to the calibration laboratory. The calibrator is self-contained for reference and test probes, self-sufficient and meets ISO9000 requirements.

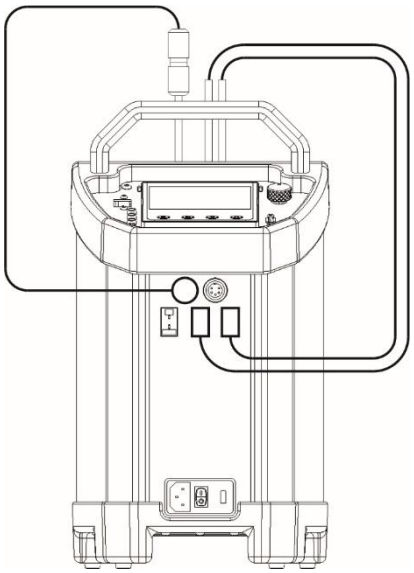

11 Mode Of Operation

11.1 Metal Block Bath

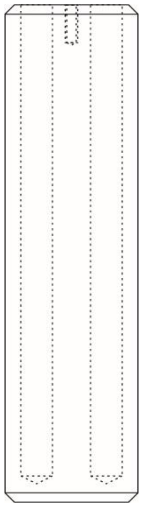

The thermometers under test are placed into suitable holes in the metal insert. For the ADVANCED and Site models a calibrated reference probe should be placed into the insert and the actual temperature can be read from the temperature indicator. For the Basic models an external temperature indicator should be used.

For traceable calibration the actual value of the insert temperature should be recorded along with the values from the sensors under test.

Wait until the temperature indicated by the controller and the output of the thermometer are both stable (see specification for typical values) record three sets of readings over a period of about six minutes. Check that these readings are consistent and then calculate their average values. If the device has itself been calibrated, correct the average values accordingly.

11.2 Blackbody Source

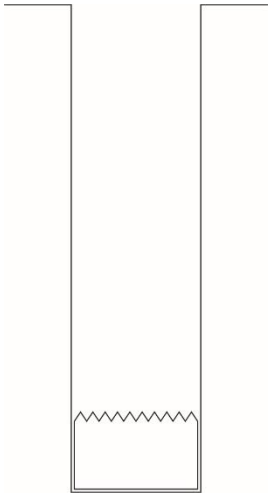

The Blackbody Target Kit (951-06-04) can be added for simple calibration on infrared thermometers.

Place the target into the well with the supplied thermocouple fitted. For the ADVANCED and Site models the actual temperature from the thermocouple can be read from the temperature indicator. For the Basic models an external temperature indicator should be used. The test IR thermometers should be compared to this value.

11.3 Surface Sensor Calibration

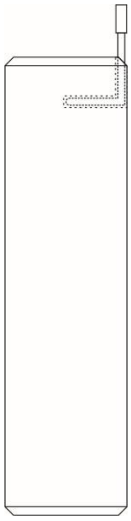

The Europa 4520 can be used with an accessory to calibrate surface sensors.

The surface sensor insert kit (part number 951-06-02), is placed into the calibration well.

The supplied PRT is placed in the pocket of the surface sensor insert and connected to the temperature indicator of the Site models. For the ADVANCED and Site models the actual temperature from the thermocouple can be read from the temperature indicator. For the Basic models an external temperature indicator should be used. The test surface thermometers should be compared to this value.

11.4 Stirred Liquid Bath

The stirred liquid bath function of the Europa 4520 is well suited for odd shaped sensors which will not easily be accommodated in a metal insert.

The Europa 4520 Liquid Container (part number 951-06-01) is placed into the calibration well and the container is filled with a suitable liquid, for the temperature range that the bath is to be used over. The container should be filled to 25mm from the top of the tank. Care must be taken to adjust the level as the liquid contracts or expands with temperature changes. The stirrer speed control is set ON and to the mid position. If necessary, the speed to can be adjusted to give the optimum value for a particular application, this position should be found experimentally and then noted for future use.

The thermometers under test are placed into the liquid. Two accessories are available to support the thermometers.

a) The Thermometer Support Kit (part number 921-02-06) allows thermometers with a diameter of 2 to 6.5mm to be suspended in the liquid.
b) The Sensor Guide which fits into the tank and can support a number of thermometers (part number 951-02-24).

It is important that one of the accessories is used to prevent the probes from reaching the bottom of the tank which would stop the stirring action. For the S models a calibrated reference probe should be placed into the liquid and the actual temperature can be read from the temperature indicator. For the B models an external temperature indicator should be used.

For traceable calibration the actual value of the liquid temperature should be recorded along with the values from the sensors under test.

11.5 ITS-90 Fixed Point Calibration

The ITS-90 fixed point function of the Europa 4520 is well suited for fast, convenient, mess free calibration of thermometers to uncertainties as low at 0.001°C.

The special cell is placed into the Europa 4520 calibration well. The stir speed control should be set to the OFF position. For detailed operating information, refer to the separate manual provided with the Cell

11.6 Isotech Basic Dry block interface

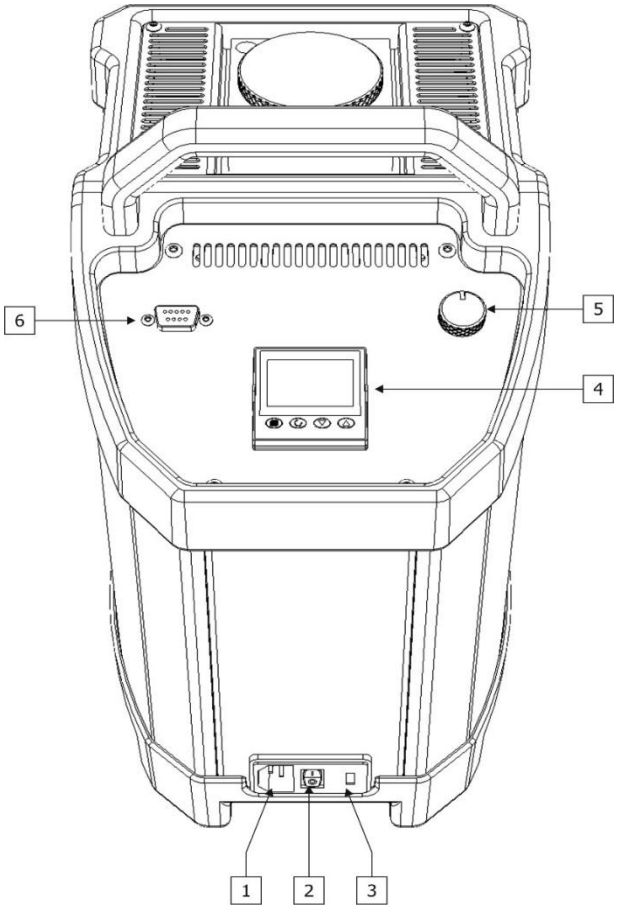

1. **Main supply voltage connection socket**
   This socket allows the Mains Voltage to be applied to power up the equipment. Use only the supplied lead or a suitably specified IEC alternative. Confirm the supply voltage using the ratings label on the rear of the equipment.

2. **Power On/Off switch**
   Once the Power lead is connected, this switch will power up and down the equipment

3. **Fuse carrier and window showing fuse rating**
   With the mains cable disconnected, the fuse carrier can be removed for the inspection or replacement of the fuse. The fuse rating is displayed through the window.

4. **Temperature Controller**
   Refer to Section 14 for details.

5. **Magnetic stirrer speed adjuster**
   Manual adjustment of the Magnetic stirring speed (where fitted)

6. **PC Serial interface**
   Enables connection to a PC. Refer to Section 16 for details.

11.7 Isotech Site Dry block interface

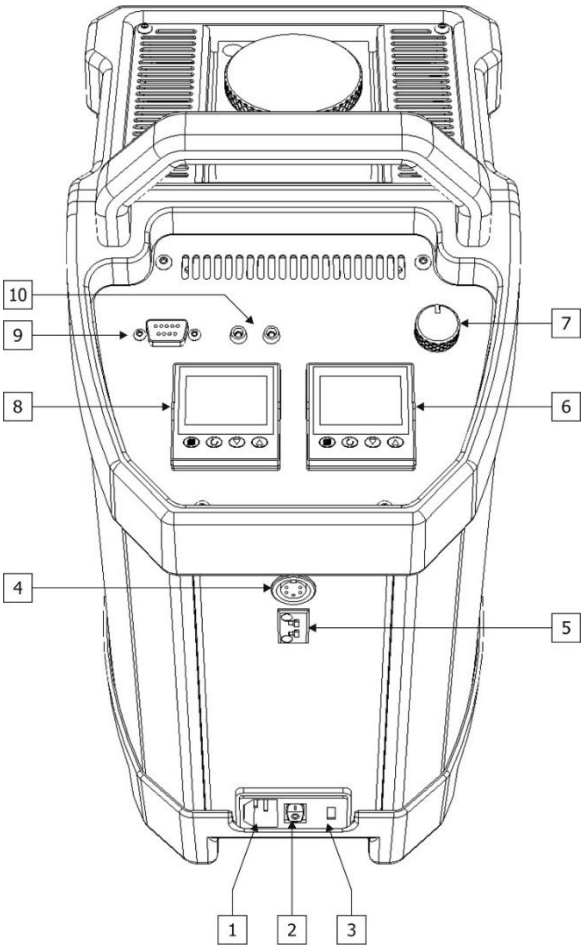

1. **Main supply voltage connection socket**
   This socket allows the Mains Voltage to be applied to power up the equipment. Use only the supplied lead or a suitably specified IEC alternative. Confirm the supply voltage using the ratings label on the rear of the equipment.

2. **Power On/Off switch**
   Once the Power lead is connected, this switch will power up and down the equipment

3. **Fuse carrier and window showing fuse rating**
   With the mains cable disconnected, the fuse carrier can be removed for the inspection or replacement of the fuse. The fuse rating is displayed through the window.

4. **PRT input socket**
   These allow for the connection of external Platinum resistance thermometers. ***Warning:*** *Do not connect any other form of input to these sockets.*

5. **Thermocouple input socket**
   These allow for the connection of a range of Thermocouples to be connected. ***Warning:*** *Do not connect any other form of input to these sockets.*

6. **Temperature controller**
   Refer to Section 14 for details.

7. **Magnetic stirrer speed adjuster**
   Manual adjustment of the Magnetic stirring speed (where fitted)

8. **Temperature indicator**

9. **PC Serial interface**
   Enables connection to a PC. Refer to Section 16 for details.

10. **Switch Contact (thermostat)**

12 Specification

	Model
Parameter	**Europa 4520 Basic/Site**
Temperature Range	-45°C to 140°C**
Stability	Blackbody ±0.3°C Surface Sensor ±0.5°C ITS-90 Cells ±0.0005°C
Display Resolution	0.01°C from -19.99 to 99.99°C then 0.1°C: 0.01°C over PC Interface
Uniformity – between Wells Dry Block Mode (Radial)	<0.008°C
Uniformity – lower 40mm (Axial) Dry Block Mode	<0.040°C
Uniformity – Radial Liquid Bath Mode	<0.02°C
Uniformity – Lower 40mm (Axial) As Liquid Bath Mode	<0.026°C
Cools from 140°C to 0°C	in 15 minutes
Heats from -30°C to 140°C	in 15 minutes
Best Performance	See Graph (refer to Section 13)
Calibration volume	35mm diameter by 160mm deep
Standard Insert	6 pockets, 2 x 4.5mm, 2 x 6.4mm, 1 x 8.0mm, 1 x 9.5mm diameter, all 157mm deep
Indicator units	°C, °F, K
Power	115Vac or 230Vac 50/60Hz 150 Watts
Dimensions	384H (including handle) x 212W x 312Dmm
Weight	10.2kg

**In ambient of 20°C: minimum temperature is 55°C below ambient, absolute minimum -45°C

13 Best Performance Graph

Europa heat-up / cool-down graph with insert fitted:

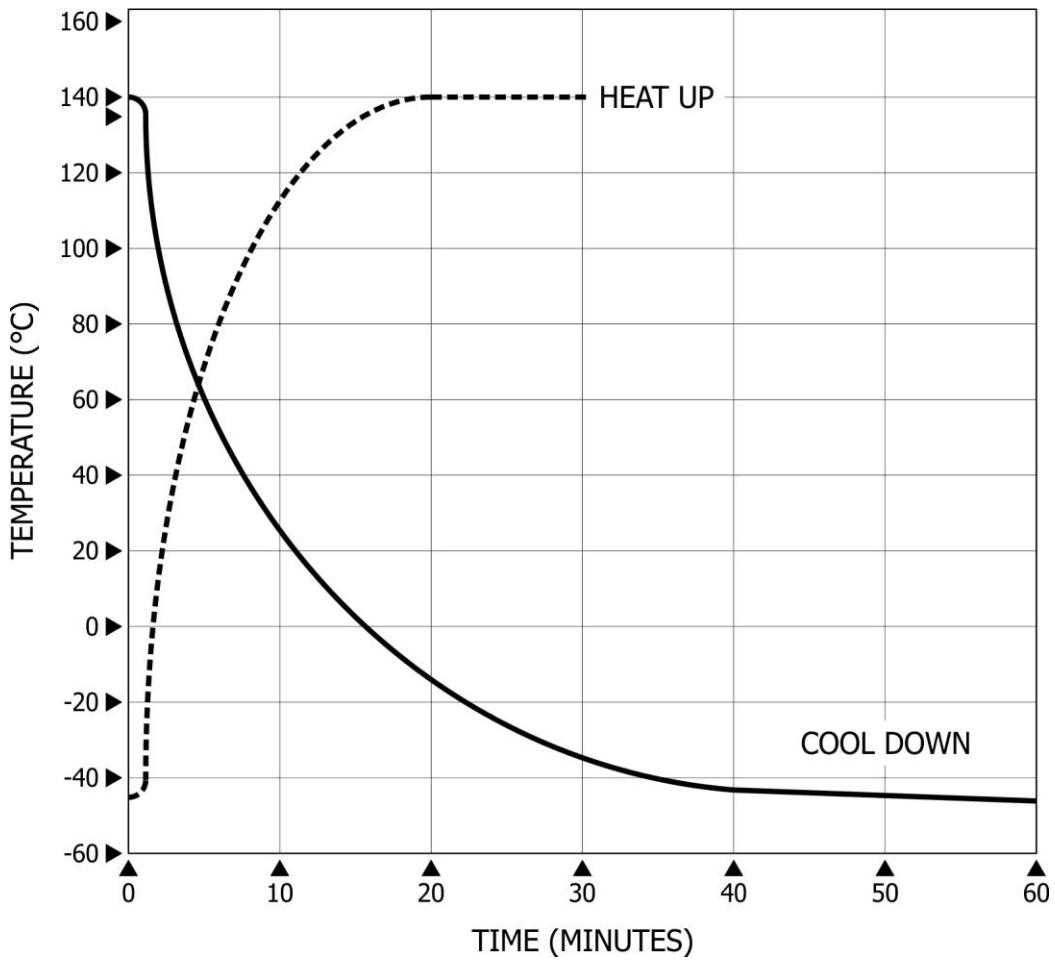

14 Operating The Model

14.1 Front Panel Layout

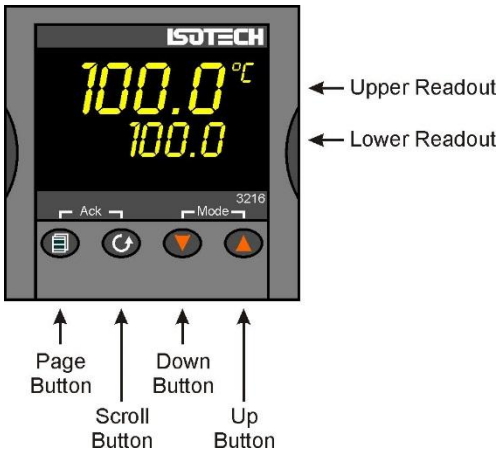

14.1.1 The Temperature Controller

The controller has a dual display, the upper display indicates the nominal block temperature, and the lower display indicates the desired temperature or setpoint.

14.1.2 Altering the Setpoint

To change the setpoint of the controller simply use the UP and DOWN keys to raise and lower the setpoint to the required value. The lower display changes to indicate the new setpoint.

14.2 Controller Features

14.2.1 Setpoint Ramp Rate

By default, the Dry Blocks are configured to heat and cool as quickly as possible. There may be some calibration applications where it is advantageous to limit the heating or cooling rate.

An example might be when testing bimetallic thermostats; by forcing the Dry Block to heat at a controlled rate it is easier to determine the temperature at which the thermostat changes state.

The Dry Block can have its heating rate limited with the Setpoint Ramp Rate feature. This feature is accessed from the Scroll key. Depress the key until the display shows,

SP.RAT

The upper display will show the current value, and is adjustable from OFF to 999.9. The units are °C/min and are adjustable via the UP/DOWN keys.
When the SP.RAT is active the lower setpoint display will now automatically update with the current value, known as the working setpoint. The setpoint can be seen by pressing either the UP and DOWN key.

The Setpoint ramp rate operates when the bath is heating and cooling.

14.2.2 Instrument Address

The controller has a configurable "address" which is used for PC communications. Each instrument has an address; this allows several instruments to be connected in parallel on the same communications bus. The default value is 1. This address would only need to be changed if more than one Dry Block is connected to the same PC port.

To check the Address value, press the scroll key until the lower display indicates,

ADDR

The upper display will show the current value that can be modified with the UP and DOWN keys.

14.3 Monitoring The Controller Status

A row of beacons indicates the controller's status as follows,

OP1	Heat Output
OP2	Cool Output (only for models which operate below 0°C)
REM	This beacon indicates activity on the PC interface

For models fitted with cool down fans, such as the Calisto and Jupiter, the lower display will alternate between the setpoint and the message, cooling to temperature. This message is not an error but is showing that the cooling fan is operating. It will automatically switch off when the temperature is within 5°C of the setpoint.

14.3.1 Units

Momentary pressing of the Scroll key will show the controller units °C or °F.

14.4 The Temperature Indicator: Site Models Only

The Site models include an electronic temperature indicator. The indicator can be configured for the desired sensor type, and for custom calibration data. The customer calibration data can be set ON or OFF.

14.5 Connecting Temperature Sensors

14.5.1 Platinum Resistance Thermometers, PRTs

Set the input type to suit from either the front panel of the Isotech Config Software utility.

PRTs can be connected to Inputs P1 and P2. When connecting a PRT ensure the corresponding thermocouple input is not used, that is if connecting a PRT to Input P1 then Input T1 must not be used, is if connecting a PRT to Input P2 then Input T2 must not be used.

14.5.2 Input Connections

The five-pin cable plug to suit PRTs is part number 935-16-107. These are readily available; suppliers include RS Components (Part Number 129-8573) and Farnell (Part Number 112-2585).

With three wire PRT connections ensure identical lead resistance in all three legs of the connection by using the same length and gauge of cables.

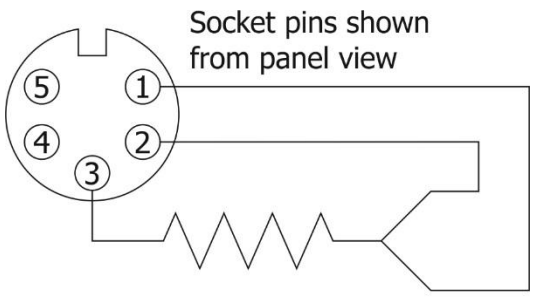

Platinum Resistance
Thermometer Connections

14.5.3 Connecting Thermocouples

Set the input type to suit from either the front panel of the Isotech Config Software utility.

Thermocouples can be connected to Inputs T1, T2 and T3. When connecting a thermocouple ensure the corresponding PRT input is not used, that is if connecting a thermocouple to Input T1 then Input P1 must not be used, is if connecting a thermocouple to Input T2 then Input P2 must not be used.

Input connectors are the industry standard "miniature thermocouple plugs".

14.5.4 Setting the Input Type

A 100 Ohm resistance thermometer can be connected to the PRT Connector or a thermocouple may be connected to the miniature TC Connector.

Ensure that only a PRT or a TC is connected at any one time. If a PRT and TC are connected simultaneously the indicator will read in error.

Check that any sensor placed into the equipment is suitable for the temperature range. Sensors can be damaged if taken outside their normal operating limits.

The desired sensor type is easily set, press the Scroll key until the lower display indicates,

In.Typ

The upper display will show the current set sensor type,

J.tc	J thermocouple
K.tc	K thermocouple
L.tc	L thermocouple
r.tc	R thermocouple (Pt/Pt13%Rh)
b.tc	B thermocouple (Pt30%Rh/Pt6%Rh)
n.tc	N thermocouple
t.tc	T thermocouple
S.tc	S thermocouple (Pt/Pt10%Rh)
PL.2	PL 2 thermocouple
rtd	100 Ohm platinum resistance thermometer.
T012	E thermocouple

Again, the value can be modified with the UP and DOWN keys.

14.6 Enabling/Disabling Custom Calibration

Custom calibration allows the indicator to be programmed to suit a particular temperature sensor. This allows the indicator to automatically show the true temperature, without having to manually apply a correction.

When the Custom or User Calibration is active the indicator will show the REM beacon lit continuously. The use of User calibration can make a significant difference to the accuracy of the instrument, and this REM beacon provides a clear and continuous indication of the calibration status. Isotech will configure and set user calibration when the Dry Block is ordered with a temperature sensor.

To alter the calibration status, press the Scroll key until the lower display shows,
UCAL

The upper display will indicate either,
ON for user calibration

Or

OFF for factory calibration of the indicator

Use the UP and DOWN keys to toggle between the two values.

When calibrating an unknown sensor against a calibrated probe it may be necessary to switch the calibration off for the unknown, and on for the calibrated probe.

14.7 Instrument Address

Like the controller, the indicator has a configurable "address" which is used for PC communications. Each instrument has an address; this allows several instruments to be connected in parallel on the same communications bus. The default value is 2 (The controller defaults to 1).

This address would only need to be changed if more than one Dry Block is connected to the same PC port.

To check the Address value, press the scroll key until the lower display indicates,

ADDR

The upper display will show the current value that can be modified with the UP and DOWN keys.

14.8 Monitoring The Indicator Status

For the indicator the REM beacon is lit continuously when the user calibration is active, the REM beacon flashes when the PC communications port is active.

14.8.1 Units

Momentary pressing of the Scroll key will show the controller units °C or °F.

14.9 Indicator Operation

The indicator can be configured with up to five custom calibration points; the points contain "data pairs". First the temperature (point) and secondly the Error (offset) at this temperature point. Isotech Dry Block calibration certificates will show the values to suit a particular sensor.

These values can be inspected, and modified with the following procedure,

Hold the PAGE key down until the display indicates,
CONF
GOTO

then
0
CODE

Set the Code to 2 with the UP key

The display reads,
CONF

Press the Page Key until the controller shows
CAL

Now use the Scroll key to examine the data pairs. The values Pnt 1- Pnt 5 and Ofs 1 to Ofs 5 can be modified with the UP and DOWN keys.

To exit this mode, hold the Page key until the top display shows,
CONF
GOTO

And then set the upper display to Lev 1. While in this mode take care not to modify other parameters.

15 Calibration Data Example

A maximum of five points may be entered, shown as Pnt 1 to Pnt 5 for the temperature point and Ofs 1 to Ofs 5 for the offset values.

The Pnt values must be entered in ascending order.

Set a Pnt to a value lower than the previous point to disable it.

The indicator would be programmed with the following data:

Pnt 1	100	Ofs 1	0.8
Pnt 2	300	Ofs 2	1.1
Pnt 3	500	Ofs 3	2.1
Pnt 4	-999	Ofs 4	0
Pnt 5	-999	Ofs 5	0

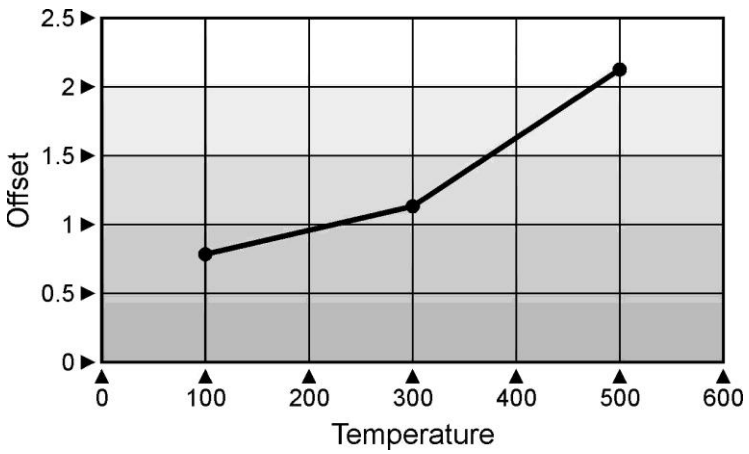

15.1 Connecting A 4-20mA Current Transmitter

The transmitter should be powered externally, a 2.49 Ohm current sense resistor is fitted internally to the equipment and this allows the indicator to read mA input.

To scale the linear to display temperature:

1. The scaling can be configured in the CAL sub-menu within CONF menu.
2. Access the Input sub-menu by pressing the Page button.
3. Set the input type to mV.
4. Press again to enter the mv.hi value (see table below)
5. Press again to enter the mv.lo value (see table below)
6. Press again to enter the rng.hi value (see table below)
7. Press again to enter the rng.lo value (see table below)
8. To exit press Page and Scroll buttons together and select level 1 using the up/down buttons.

EXAMPLE: From the input menu iP set the mv.hi, rng.hi and rng.lo parameters to suit see table below:

Linear Input Scaling - The next 4 parameters only appear if a linear input is chosen

e.g. 4 to 20mA = 0 to 100°C

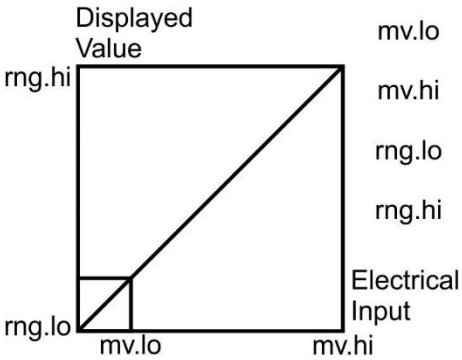

mv.lo	Input value low	i.e. 4mA set 9.96
mv.hi	Input value high	i.e. 20mA set 49.8
rng.lo	Displayed reading low	0°C
rng.hi	Displayed reading high	100°C

E.g. 4-20mA = 0 to 100°C

mv.lo	=	9.96 (mV)	(4mA x 2.49Ω)
mv,hi	=	49.8 (mV)	(20mA x 2.49Ω)
rng.lo	=	0 (°C)	
rng.hi	=	100 (°C)	

CONNECTION DETAILS

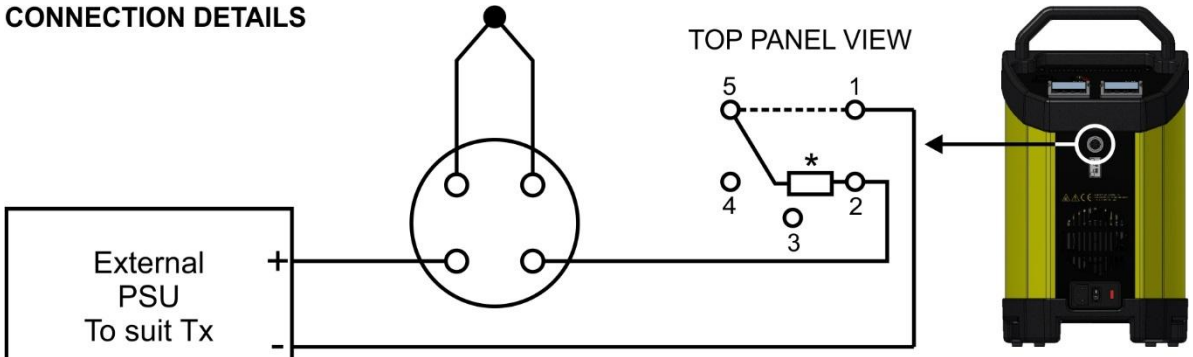

*2.49Ω resistor fitted internally (Pins 2 and 5).
Link Pins 1 and 5 for transmitter inputs.
Remove link for PRT's.
Socket Pins shown from Panel View

15.2 Using the Current Loop Interface 935-06-161 with the Site model

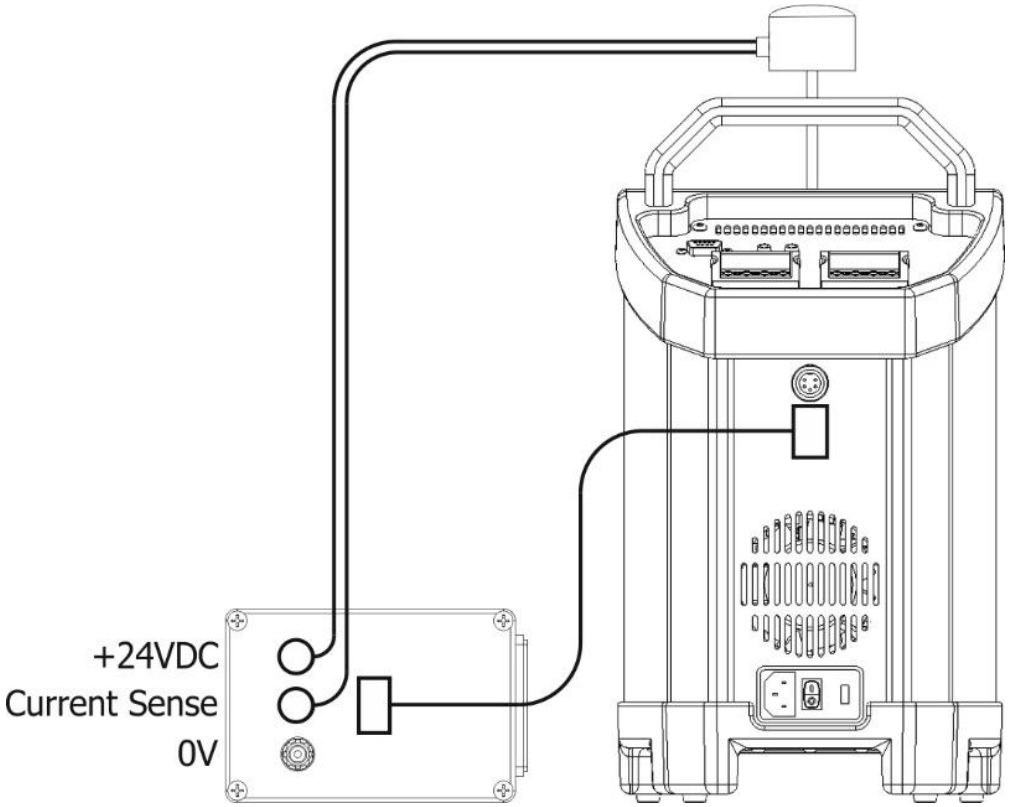

Connect the Transmitter to the equipment as shown in the above image.

Note: do not connect 935-06-161 via the PRT socket. The Current Loop interface has built in resistance and does not require the internal resistance of the equipment. Connect via the Thermocouple socket only.

15.3 Testing Thermal Switches

The Site Model Europa's include a switch test facility which is used in conjunction with the supplied Cal Notepad Software. See Cal Note Pad manual or instructions on how to use this.

15.4 Procedure for the reversal of the polarity for the Switch Contact feature

1. Enter Configuration level on the temperature Indicator as described in **INDICATOR OPERATION**

2. Press the PAGE button to enter **IO-1**

3. Press the Scroll button to enter **I.SENSE**

4. Use the up/down button to toggle between **nor** or **inv**

5. Exit this level by pressing **PAGE** and **SCROLL** together and selecting either **LEVEL 1** or **LEVEL 2** and the polarity will have changed.

15.5 Selecting Input Type

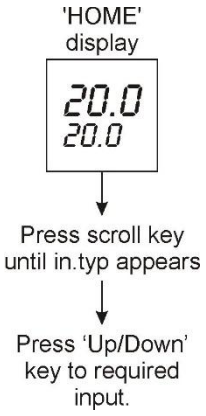

16 Using The PC Interface

The 4000 series models include an RS422 PC interface and a special converter cable that allows use with a standard RS232 port. When using the bath with an RS232 port it is essential that this converter cable is used. Replacement cables are available from Isotech, part number ISO-232-432. A further lead is available as an option, Part Number ISO-422-422 lead which permits up to 5 instruments to be daisy chained together.

The benefit of this approach is that a number of calibration baths may be connected together in a "daisy chain" configuration - and then linked to a single RS232, see diagram.

Note: The RS 422 standard specifies a maximum lead length of 1200M (4000ft). A true RS422 port will be required to realise such lead lengths. The Isotech conversion leads are suitable for maximum combined lead lengths of 10M that is adequate for most applications.

16.1 Connections

For RS232 use simply connect the Isotech cable.

RS422 Connections

Pin	Connection
4	Tx+ A
5	Tx- B
8	Rx+ A
9	Rx- B
1	Common

16.2 Protocol

The instruments use the "Modbus Protocol"

If required, e.g., for writing custom software the technical details are available from our Document Library at www.isotech.co.uk

17 Cal Notepad

Cal Notepad can be used can be used to log and display values from the Dry Blocks and an optional temperature indicator such as the milliK or TTI-10. The software requires Windows 9X, XP, a minimum of 5Mb of free hard drive space and free serial ports for the instruments to be connected.

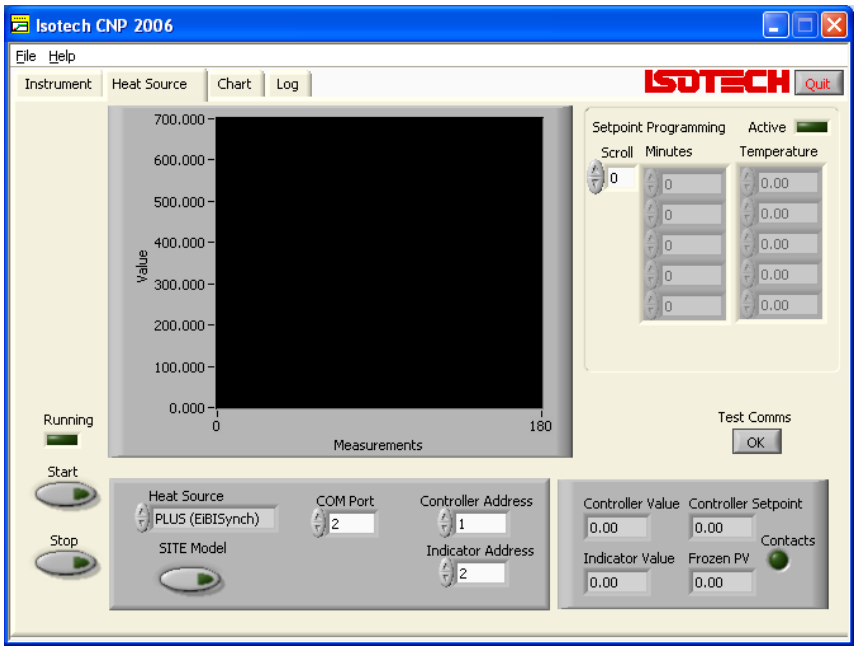

17.1 Development

Cal Notepad was developed by Isothermal Technology using LabVIEW from National Instruments. The license details are shown on the download page and in the Cal Notepad manual.

17.2 Isotech I-Cal EASY LOG

This application allows logging of data from the 4000 series model. Additionally, if a license is purchased it allows for fully automatic calibration including certificate printing and the calculation of coefficients.

Refer to the Isotech I-Cal EASY handbook and help system for more details

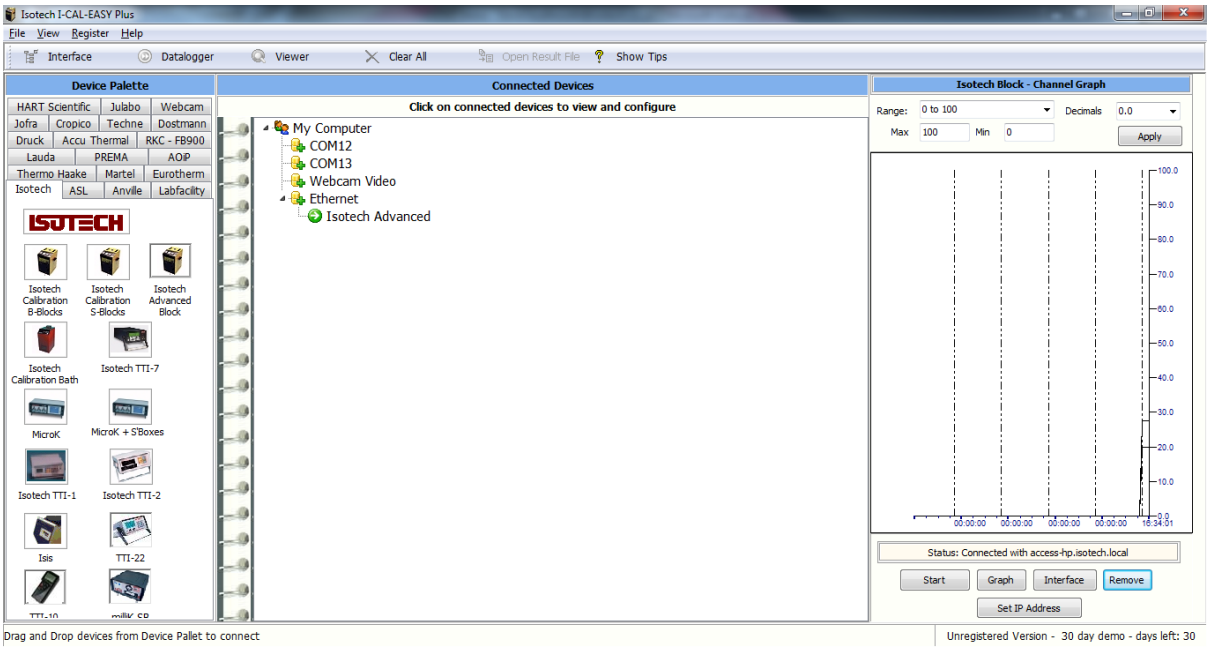

More information can be downloaded from the Isotech website
http://www.isotech.co.uk/downloads

18 Diagnostic Alarms

Diagnostic alarms indicate a possible fault within the controller or connected devices.

Display shows	What it means	What to do about it
E.Conf	A change made to a parameter takes a finite time to be entered. If the power to the controller is turned off before the change has been entered then this alarm will occur. Do not turn the power off to the controller while ConF is flashing	Enter configuration mode then return to the required operating mode. It may be necessary to re-enter the parameter change since it will not have been entered in the previous configuration.
E.CaL	Calibration error	Re-instate Factory calibration, refer to Isotech
E2.Er	EEPROM error	Return to Isotech for repair
EE.Er	Non-vol memory error	Note the error and contact Isotech.
E.Lin	Invalid input type. This refers to custom linearisation which may not have been applied correctly or may have been corrupted.	Go to the INPUT list in configuration level and set a valid thermocouple or input type
Emod	IO1, OP2, or OP3 has been changed	If this has been field changed by the installation of a new board, enter config level, then exit back to operator level. If the message occurs at any other time return to factory for repair.

Additional Information;

1. If the input is too high HHHHH will be displayed.
2. If the input is too low LLLLL will be displayed.

19 Appendix 1: Indicator Configuration (Reference Only)

Config.INST

Name	Description	Value
unit	Instrument Units	`C (0)
dEcP	Decimal Places in Display	NN.NN
CtrL	Control Type	PID (0)
Act	Control Action	REV (0)
COOL	Cooling Type	LIN (0)
PwrF	Power Feedback Enable	OFF (0)
Pdtr	Manual/Auto Transfer PD Control	NO (0)
FoP	Forced Output Enable	NO (0)
Sbrt	Sensor Break Type	SB.OP (0)
rnGH	Process Value High Limit	670
rnGL	Process Value Low Limit	0.00

Config.IP

Name	Description	Value
inPt	Linearisation Type	RTD
CJC	CJC Type	(EXT)
imP	Sensor break impedance	AUTO (1)

Config.CAL

Name	Description	Value
UCAL	User Calibration Enable	YES (1)
Pnt1	User Cal Point 1	0
Pnt5	User Cal Point 5	-99.00
OFS1	User Cal Offset 1	0.00
Pnt2	User Cal Point 2	-99
OFS2	User Cal Offset 2	0.00
Pnt3	User Cal Point 3	-99
OFS3	User Cal Offset 3	0.00
Pnt4	User Cal Point 4	-99.00
OFS4	User Cal Offset 4	0.00
OFS5	User Cal Offset 5	-99.00

Note: User Cal values are unique to each instrument. If available set values to those from calibration certificate

Config.AL

Name	Description	Value
AL_1	Alarm 1 Type	OFF (0)
Ltch1	Alarm 1 Latching	NO (0)
AL_2	Alarm 2 Type	OFF (0)
Ltch2	Alarm 2 Latching	NO (0)
AL_3	Alarm 3 Type	OFF (0)
Ltch3	Alarm 3 Latching	NO (0)
AL_4	Alarm 4 Type	OFF (0)
Ltch4	Alarm 4 Latching	NO (0)

Config.HA

Name	Description	Value
id	Module Identity	CMS (7)
Func	Module Function	CMS (65)
bAud	Baud Rate	9600 (0)
Prty	Comms Parity	NONE (0)
rES	Comms Resolution	FUL (0)

Config.1A

Name	Description	Value
id	Module Identity	LOG (3)
Func	Module function	NONE (0)
SEnS	Sense of Output	NOR (0)

Config.2A

Name	Description	Value
id	Module Identity	LOG (3)
Func	Module function	NONE (0)
SEnS	Sense of Output	NOR (0)