USER GUIDE

EK30

Evikon

Distributed by AKRIBIS

Evi KONTROLL SYSTEMS

Evikon

IP52 · 24 VDC · Modbus · CE

Updated 14.11.2023

Led warning sign with horn type EK3x/EK6x

Features

- Bright LEDs
- Flashing or continuous light
- Pre-select text or pictograms
- Independent programming of LEDs and sounder in different alarm modes
- Options for single or double-sided signs
- Simple installation
- Red or yellow LED colors are available

Evikontroll Systems OÜ • Teaduspargi 9, Tartu, 50411 Estonia • Tel +372 7336310 • info@evikon.ee • www.evikon.ee

Control modes

EK3X and EK6X series have 3 different control modes which can be configured based on the client needs and installation possibilities. The control modes are following:

- Modbus Control Mode
- Wire Control Mode
- Direct Control Mode

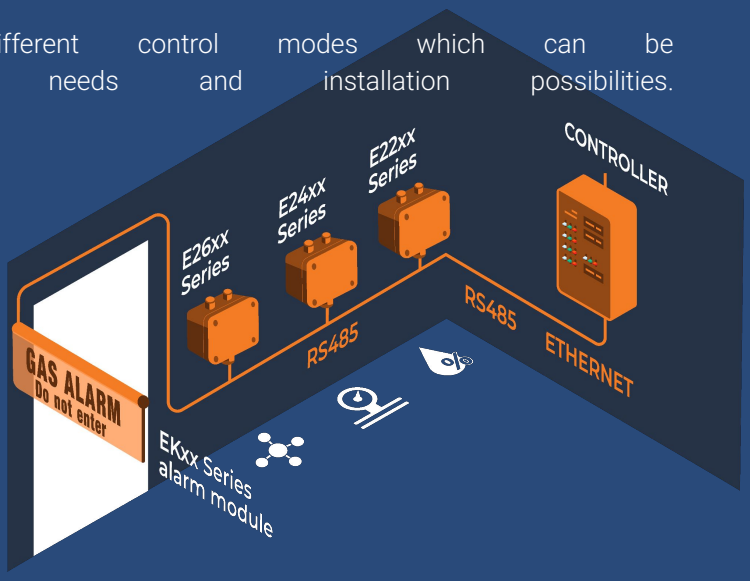

Modbus Control Mode

EK3X and EK6X are fully operable with Modbus RTU protocol through RS-485 bus. Depending on the situation the central system can send a signal to the instrument to switch to a desired alarm mode in various situations.

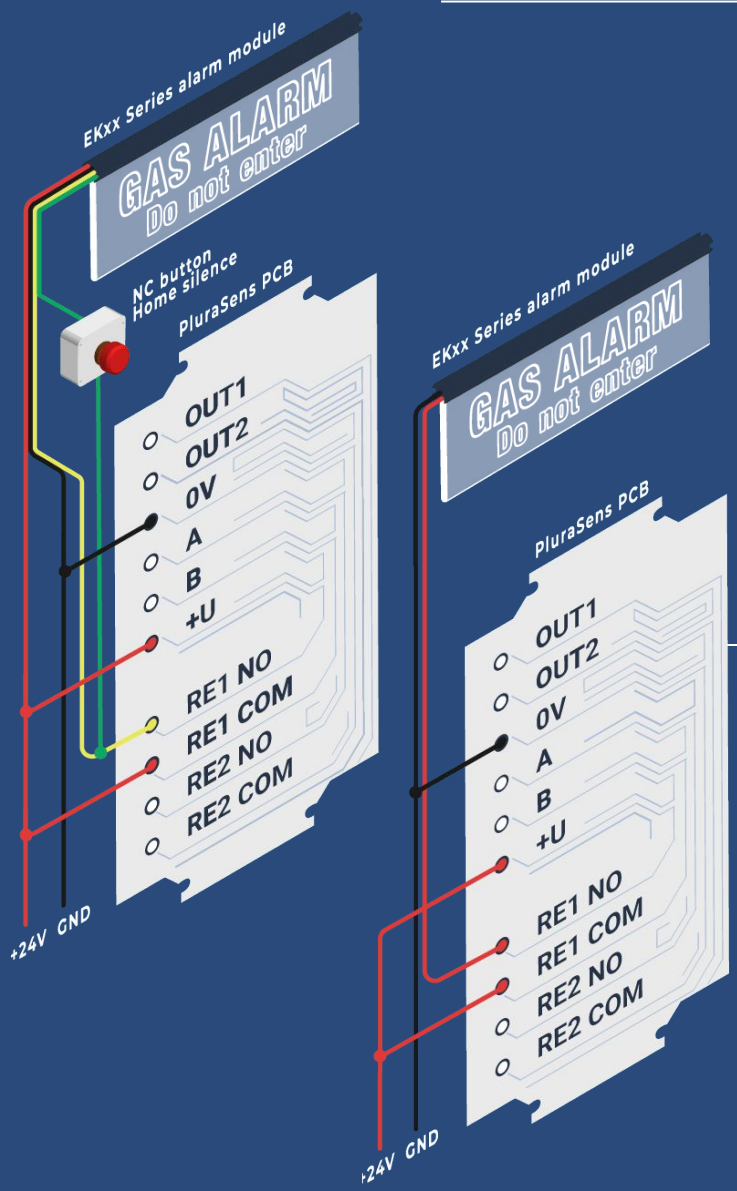

Wire Control Mode

EK3X and EK6X series can be controlled with 24 V signals instead of Modbus RTU. After configuration, the instrument will then be put into a Wire Control Mode, where A and B wires are going to be used to control the LED and alarm horn independently.

When it detects 24 VDC signal on A wire then LED will do the function it was configured to do and when it detects 24 VDC signal on B wire then the alarm horn will do the function it was configured to do.

* The light module has to be preconfigured with Modbus before using Wire & Direct Control Mode.
* EK module is shipped in Modbus Control Mode by default.

Direct Control Mode

EK3X and EK6X series with Direct Control Mode means that the instrument will do the function it was configured to do straight after powering on. This allows the product to be used easily when an alarm situation occurs.

It is possible to integrate EK3X and EK6X series with E26XX series gas detectors by driving 24 VDC from a relay which will turn the LED-sign on.

* The light module has to be preconfigured with Modbus before using Wire & Direct Control Mode.
* EK module is shipped in Modbus Control Mode by default.

AKRIBIS · www.akribis.info · contacto@akribis.info

Operation functions

The EK3X and EK6X series have various operation functions to choose from depending on the user preference. List of various operation functions are following. Different modes of operation can function with 1 Hz, 2 Hz or 0.5 Hz frequency. This allows system integrators to decide which operation function to use in which situation.

Modbus control allows system integrators to switch between modes on request as opposed to Wire Control mode and Direct Control mode which only allow specifying which function to use in this control mode.

1 Hz Light flash & Horn

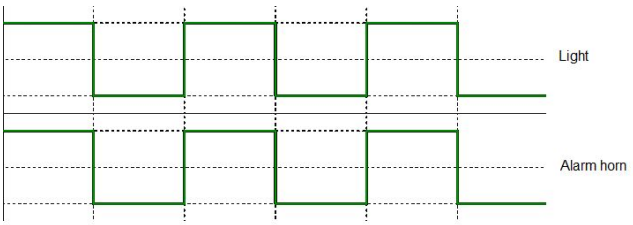

2 Hz Light flash & Horn

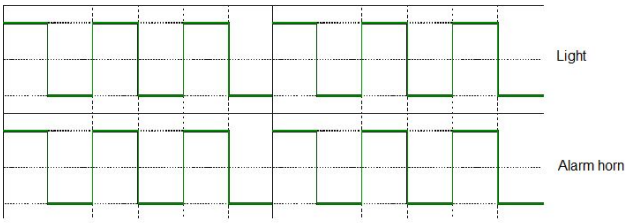

0.5 Hz Light flash & Horn

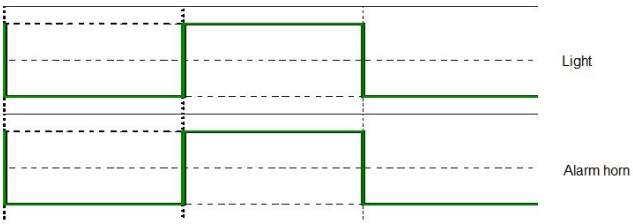

Light permanent & Horn

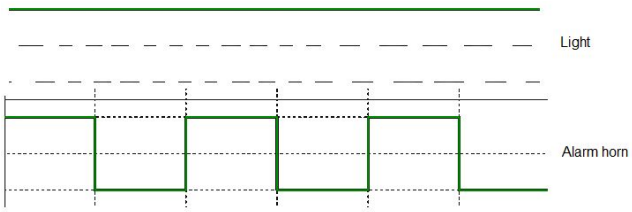

Light flash without horn

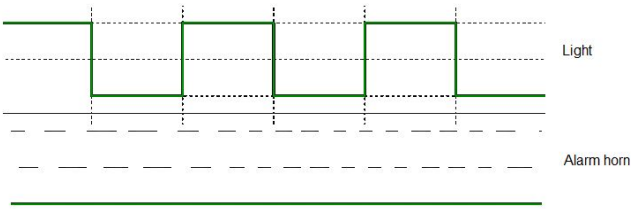

Light off with horn

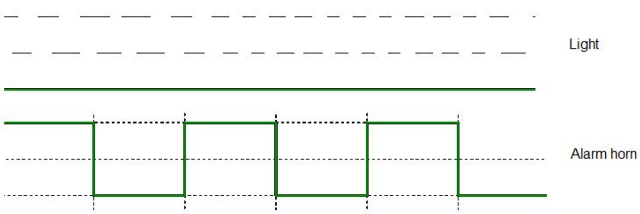

Mounting options

With a convenient round design on the aluminum frame with convenient multi-functional brackets, the EK3X and EK6X series allow users to decide how the alarm signs are going to be installed. As the frame is designed to insert the brackets in various ways it is possible to install the instrument either wall-mounted or ceiling-mounted by turning the bracket over the frame. Mounting kit includes:

- 4 x 3 pole WAGO for connecting + / - for powering and A and B for RS-485 bus
- 2 x Mounting bracket
- 2 x O-ring screw
- 4 x Nut
- 1 x connecting diagram

Wall-mount

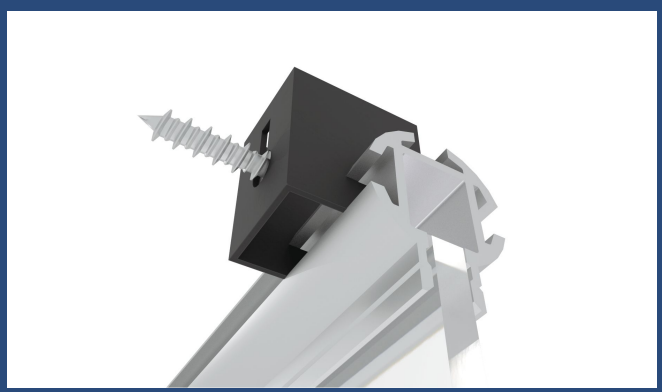

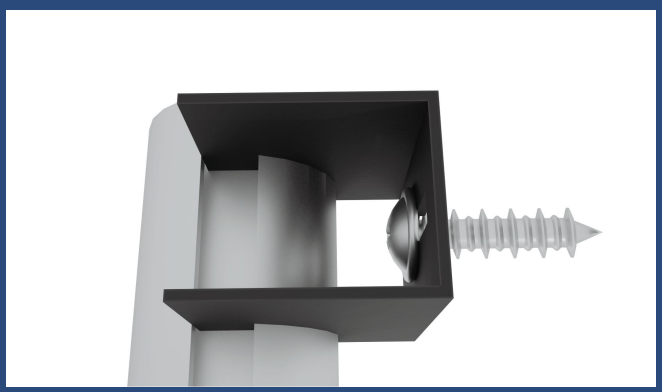

Ceiling-mount

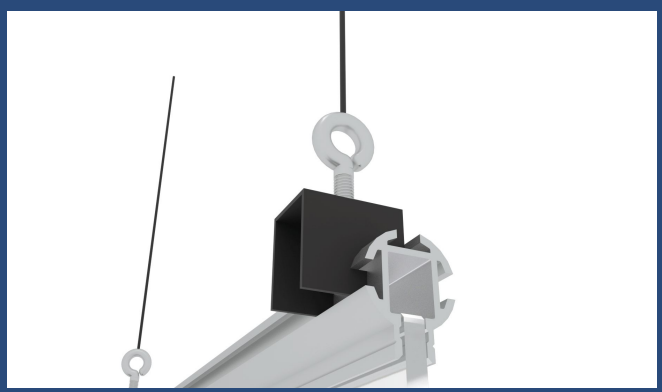

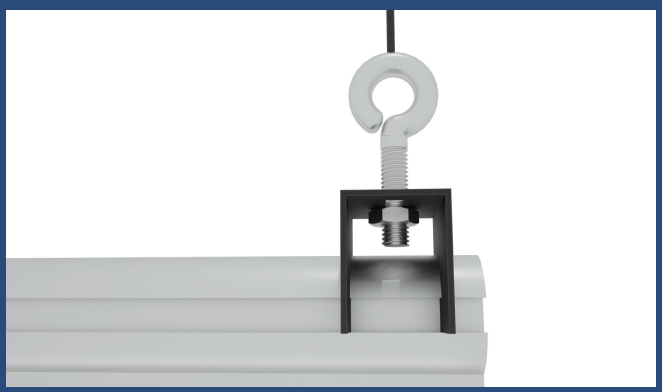

Register address	Modbus function	Function format	Format hex	Possible values / description
0	03 - Read holding registers 06 - Write single register	Controlling	0xYX	X: Operation mode (6 modes) ** 0 = OFF 1 = Alarm light flash w/o horn 2 = Alarm light flash with horn 3 = Permanent alarm light w/o horn 4 = Permanent alarm light with horn 5 = Alarm light off, only horn Y: Blinking frequency (3 modes) 0 = 1 Hz 1 = 2 Hz 2 = 0,5 H
3	03 - Read holding registers 06 - Write single register 16 - Write multiple registers	Setting horn	(DEC)	Switch off time 0...14 400 s Factory default 180 s 0 = No switch off time
5	03 - Read holding registers 16 - Write multiple registers	Bus address		Values 1...247 Factory default 1
6	03 - Read holding registers 16 - Write multiple registers	Baudrate Format	0xYYYX	YYY: Baudrate values 240, 960, 1920, 3840 (x 10 real value) Factory default - 960 X: Format (4 modes) 0 = 8N1 1 = 8E1 2 = 8N2 3 = 8E2 Factory default 0 = 8N
7	03 - Read holding registers 16 - Write multiple registers	Safety code (0x8F8F)	(Hex)	Register 5+6+7 must be written in one block! *

Changing BUS settings on the device requires utilizing modbus FC (functioncode) 16.

* - Register 7 acts as a safety mechanism when writing to registers 5 and 6. To configure the baudrate and bus address, Modbus Function Code 16 (write multiple registers) must be used to write to registers 5, 6, and 7 simultaneously. For example, when configuring the baudrate to 9600 with 8 bits of data, no parity, and 1 stop bit, and the bus address to 5, then use FC 16 to write to address 5 these bytes: [0x0005, 0x9600, 0x8F8F]

** - Register 0 is light and horn settings. There are 6 modes for operation of the alarm light and 3 modes for blinking frequency. The format of that setting is 0xYX- that means the user needs to insert 0x(operation mode)(blinking frequency), e.g if the user wants to set the light as alarm light flash with horn and blinking frequency to 2 Hz, then it is needed to insert 0x21.

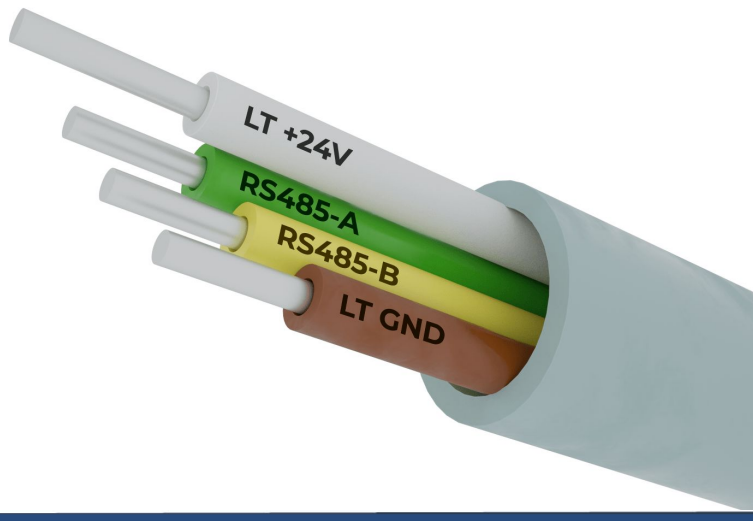

Cable connection scheme

Wire color	Connection
White	LT +24V
Green	RS485-A
Yellow	RS485-B
Brown	LT GND

AKRIBIS · www.akribis.info · contacto@akribis.info