DATASHEET

E2660

Evikon

Distributed by AKRIBIS

IP65 | 4-20 mA 0-10 V | RS485 Modbus

Dual Gas Transmitter
E2660-CO-LEL

Features

- CO and LEL gases detection
- Two analog outputs 4-20 mA and 0-10 V
- RS485 Modbus RTU digital interface
- Wall mount IP65 protected housing
- Attached or remote sensor
- Two SPST relays option
- Acoustic alarm option

Specifications

Detected gases	Carbon monoxide, hydrogen, methane, acetylene, propane, butane, hexane, octane		
Sensor type	CO: Electrochemical LEL: Metal-oxide semiconductor Pellistor (catalytic bead)		
Sampling method	Diffusion		
Sensor	**Electrochemical**	**MOS**	**Pellistor**
Detection range	0...300 ppm / 0...1000 ppm	0...100% LEL	0...100% LEL
Max. overload	2000 ppm	-	-
Resolution	1 ppm	0.1% LEL	1% LEL
Response time T90	ca. 30 s	ca. 60 s	≤10 s
Maintenance interval	12 months	12 months	6 months
Sensor lifetime	> 10 years	> 5 years	> 3 years
Operating temperature	-20...+50 °C	-40...+70 °C	-10...+50 °C
Signal update	Every 1 second		
Self-diagnostics	Full functionality check at start-up		
Warm-up time	≤ 1 min		
Power supply	12 ... 36 VDC (default) 24 VAC or 230 VAC as options		
Power consumption	< 2 VA		
Digital interface	RS485, Modbus RTU protocol		
Analog outputs	2 × 4-20 mA / 0-10 V, user settable		
Output scale width	Recommended: 20-100% of the range; > 10 × resolution in any case		
Enclosure	Grey ABS plastic, wall mount, protection class IP65		
Dimensions	H90 × W145× D55 mm		
Sensor heads	M25		
Remote sensor probe	Protection IP65, shielded cable default cable length 3.0 m **NOTE!** Remote probe with an electrochemical sensor have to be installed in the same environmental conditions and at the same temperature as the entire product to ensure correct measurements *This rule does not apply to remote probes with other sensor types. *This rule does not apply to electrochemical sensors, if sensor is attached (wall-mount version)		
Operating conditions	(operating temperature is specified above) 15...90 %RH (Electrochemical); ≤ 95% RH (MOS, Pellistor) Explosion-safe areas; Non-aggressive atmosphere without condensation; 0,9...1,1 atm; **NOTE!** We offer technical solutions for extreme humidity, please contact us for details.		

AKRIBIS · www.akribis.info · contacto@akribis.info

Additional options

Relay outputs	2 × SPST relays (closing contact), 250 VAC / 30 VDC, 5 A max *Alarm setpoints are user defined.
Acoustic alarm	

Ask for other versions or custom designed products

Dimensions

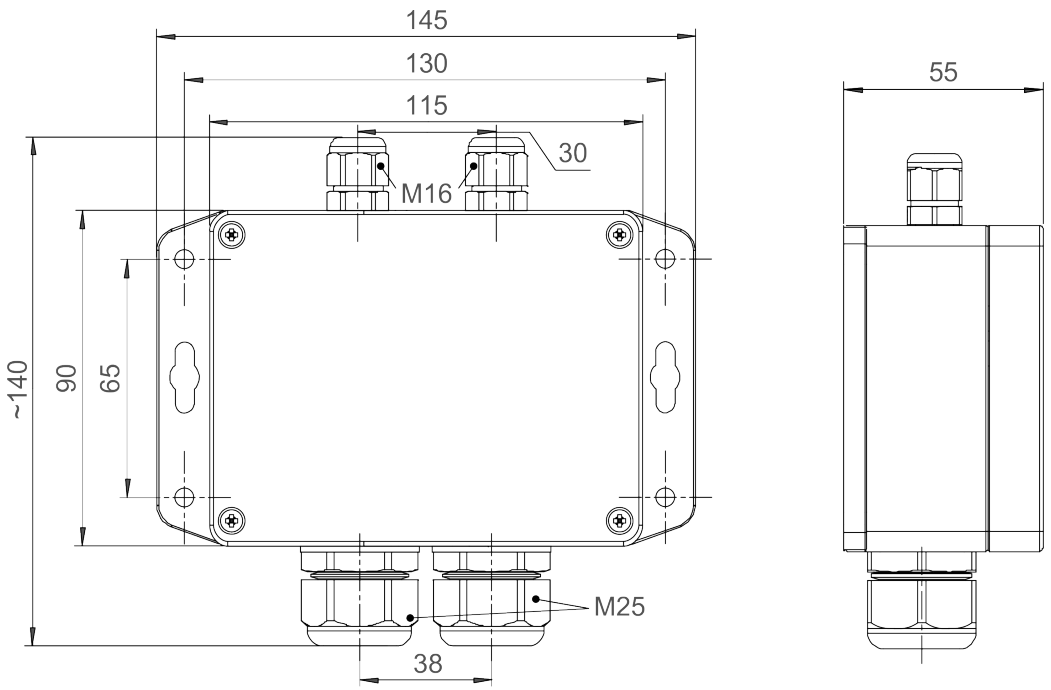

Connection diagram

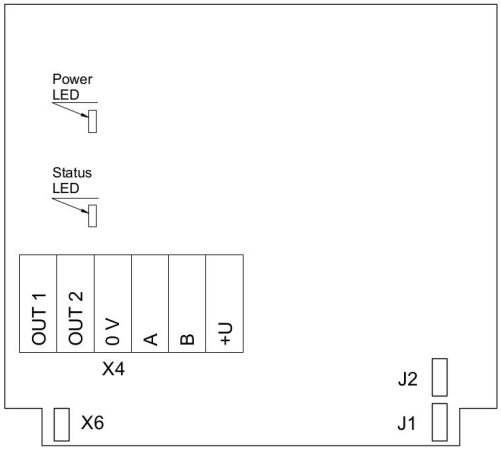

Version without PSU and relays

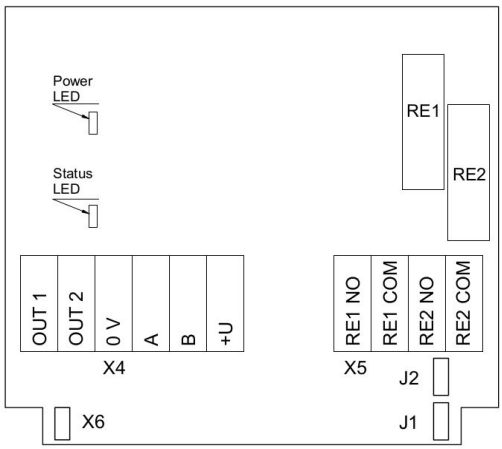

Version without PSU and with relays

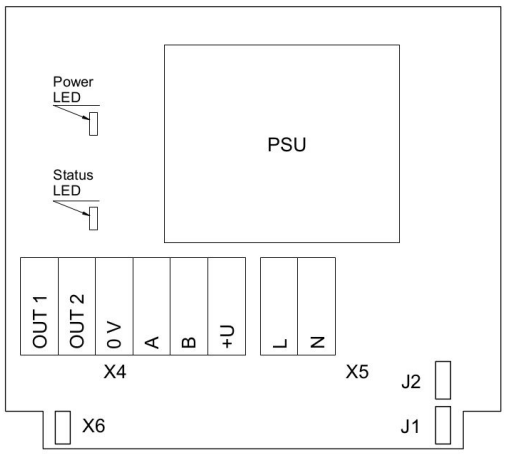

Version with PSU and without relays

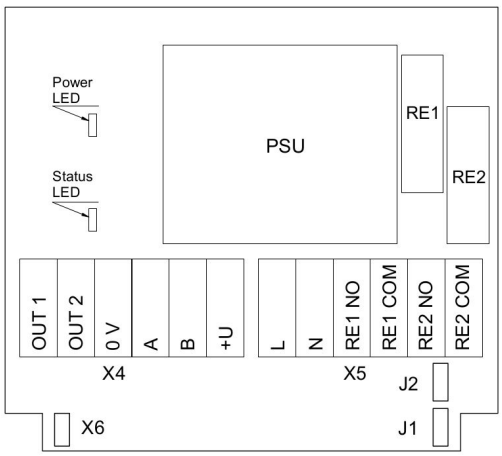

Version with PSU and relays

Jumpers

J1	OUT1 type (open: 4-20 mA; closed 0-10 V)
J2	OUT2 type (open: 4-20 mA; closed 0-10 V)
X6	Reset Modbus network parameters to default

X4 terminals

OUT1	4-20 mA / 0-10 V output
OUT2	4-20 mA / 0-10 V output
0V	0 V / 24 VAC Neutral (optional)
A	RS485 A / Data +
B	RS485 B / Data -
+U	+24 VDC / 24 VAC Phase (optional)

X5 terminals (optional)

L	90…265 VAC Phase
N	90…265 VAC Neutral
RE1 NO	Relay 1, normally open terminal
RE1 COM	Relay 1, common terminal
RE2 NO	Relay 2, normally open terminal
RE2 COM	Relay 2, common terminal

AKRIBIS · www.akribis.info · contacto@akribis.info

Remote probe

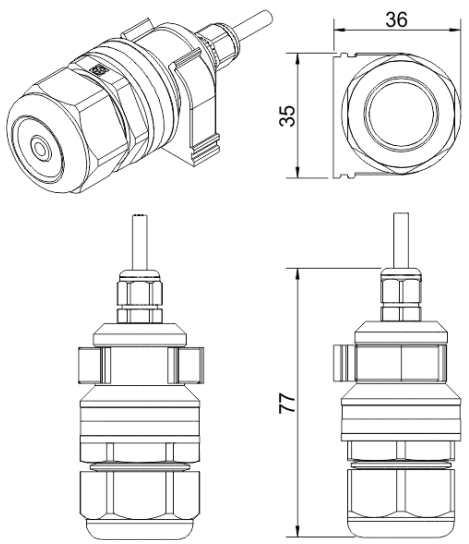

A

Wall mount remote probe with fixing clamp (default version)

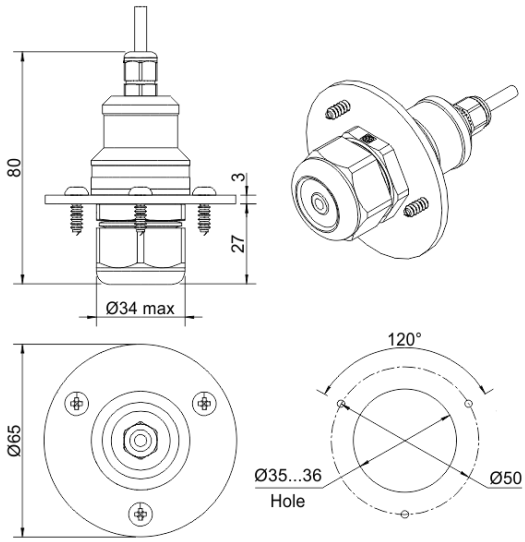

B

Remote probe with rubber flange and three self-tapping screws (on request)

AKRIBIS · www.akribis.info · contacto@akribis.info