DATASHEET

E2648

Evikon

Distributed by AKRIBIS

IP66 | 4-20 mA 0-10 V | RS485 Modbus

Nitrous Oxide Detector-Transmitter E2648-N2O

Features

- Accurate and stable measurement
- Industrial IP66 wall mount housing
- Two analog outputs settable to 4-20 mA or 0-10 V
- RS485 Modbus RTU digital interface
- Two relays for alarm / ventilation control (option)
- Attached or remote sensor

Specifications

Calibration	Nitrous oxide N_2O
Sensor type	Optical (NDIR)
Sampling method	Diffusion
Typical detection range	0...1000 ppm
Maximum overload	2000 ppm
Resolution	1 ppm
Response time T90	< 30s
Operating temperature	-20 °C to +50 °C
Sensor lifetime	> 5 years
Maintenance interval	12 months
Signal update	Every 1 second
Self-diagnostics	Full functionality check at start-up
Warm-up time	≤ 1 min
Power supply	12...36 VDC (default) 24 VAC or 230 VAC as options
Power consumption	< 2 VA
Digital interface	RS485, Modbus RTU protocol
Analog outputs	2 × 4-20 mA / 0-10 V, user settable
Output scale width	Recommended: 20-100% of the range; > 10 × resolution in any case
Enclosure	Die-cast aluminium, wall mount, protection class IP66
Dimensions	H120 × W125 × D57 mm
Operating environment	Industrial indoor and outdoor locations
Operating conditions	(operating temperature is specified above) 0...95% RH non-condensing; 0,9...1,1 atm; Explosion-safe areas; Non-aggressive atmosphere NOTE: Cross-sensitivity to CO2, ask from manufacturer details

Relay option (ordering code R)

Output relays	2 × SPST relays (closing contact), 250 VAC / 30 VDC, 5 A max
Default alarm setpoints	RE1 (LOW): 3 / 2.4 ppm (set / release) RE2 (HIGH): 6 / 4 ppm For 0...200 ppm determined by user within 5-95% of the range

Other options

Remote sensor probe	Protection IP65, shielded cable default cable length 3.0 m

Dimensions

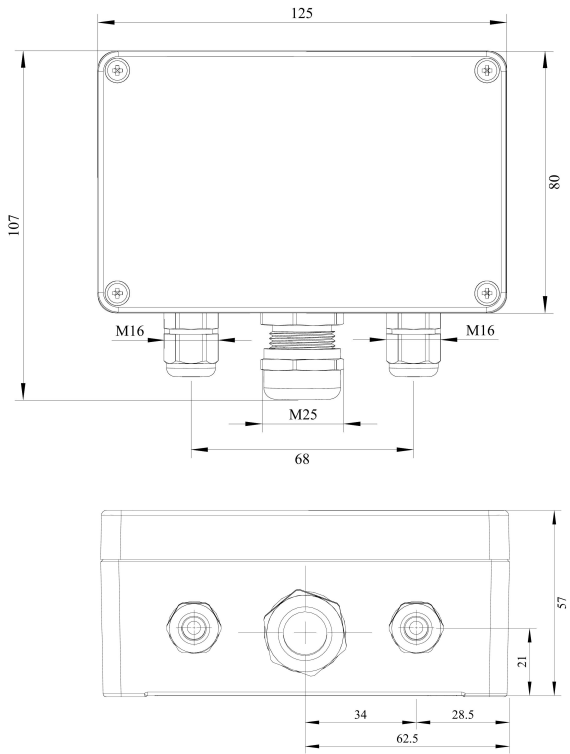

Ask for other versions or custom designed products

AKRIBIS · www.akribis.info · contact@akribis.info

Connection diagrams

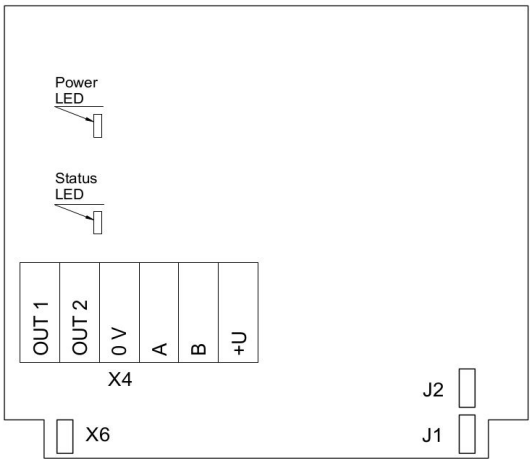

Version without PSU and relays

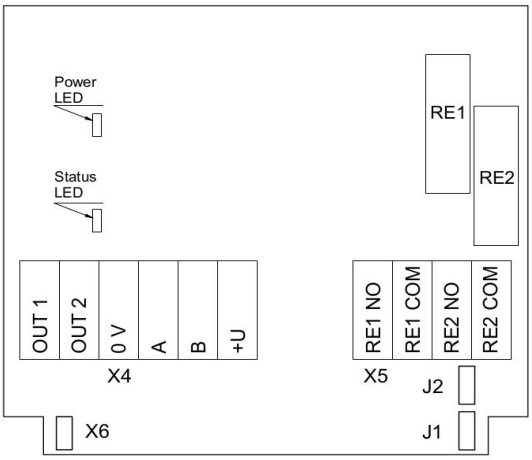

Version without PSU and with relays

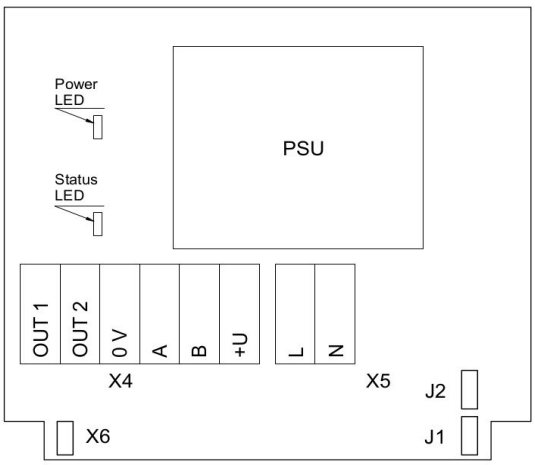

Version with PSU and without relays

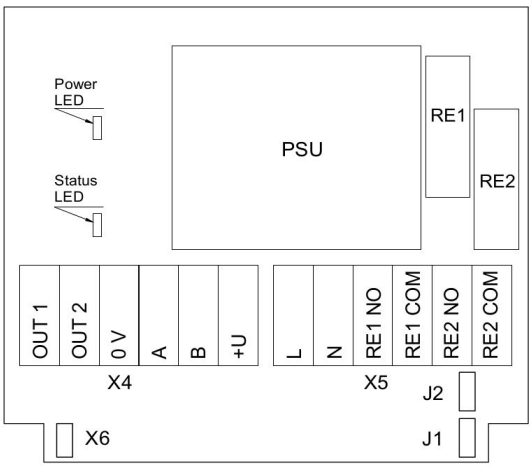

Version with PSU and relays

Jumpers

J1	OUT1 type (open: 4-20 mA; closed 0-10 V)
J2	OUT2 type (open: 4-20 mA; closed 0-10 V)
X6	Reset Modbus network parameters to default
X4 terminals	
OUT1	4-20 mA / 0-10 V output
OUT2	4-20 mA / 0-10 V output
0V	0 V / 24 VAC Neutral (optional)
A	RS485 A / Data +
B	RS485 B / Data -
+U	+24 VDC / 24 VAC Phase (optional)
X5 terminals (optional)	
L	90…265 VAC Phase
N	90…265 VAC Neutral
RE1 NO	Relay 1, normally open terminal
RE1 COM	Relay 1, common terminal
RE2 NO	Relay 2, normally open terminal
RE2 COM	Relay 2, common terminal

Remote probe

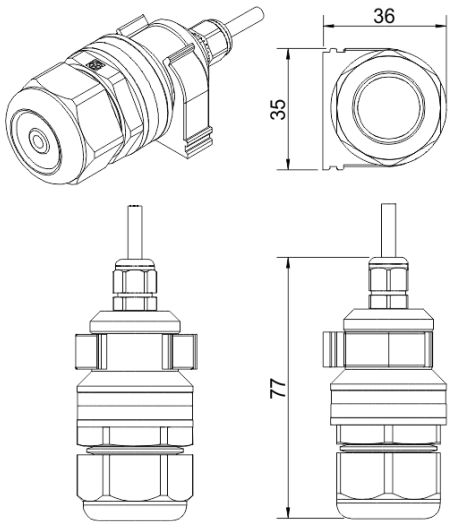

A

Wall mount remote probe with fixing clamp (default version)

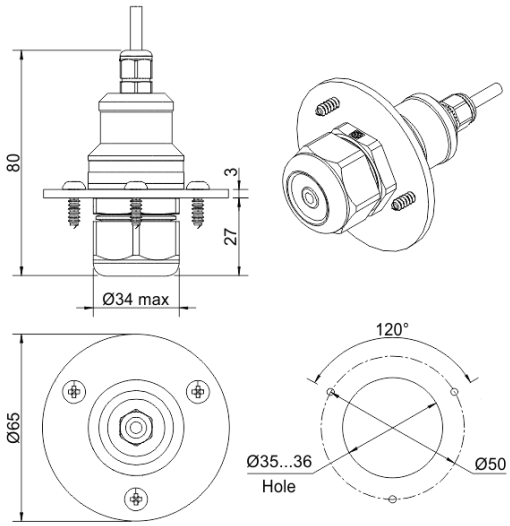

B

Remote probe with rubber flange and three self-tapping screws (on request)