DATASHEET

E2648

Evikon

Distributed by AKRIBIS

IP66 | 4-20 mA 0-10 V | RS485 Modbus

Chlorine Detector-Transmitter E2648-Cl2

Features

- Accurate and stable measurement
- Industrial IP66 wall mount housing
- Two analog outputs settable to 4-20 mA or 0-10 V
- RS485 Modbus RTU digital interface
- Two relays for alarm / ventilation control (option)
- Attached or remote sensor

Specifications

Calibration	Chlorine Cl_2
Sensor type	Electrochemical
Sampling method	Diffusion
Typical detection range	0...10 ppm
Maximum overload	100 ppm
Resolution	0.1 ppm
Response time T90	< 60 s
Sensor lifetime	> 1 years
Maintenance interval	6 months
Signal update	Every 1 second
Self-diagnostics	Full functionality check at start-up
Warm-up time	≤ 1 min
Power supply	12...36 VDC (default) 24 VAC or 230 VAC as options
Power consumption	< 2 VA
Digital interface	RS485, Modbus RTU protocol
Analog outputs	2 × 4-20 mA / 0-10 V, user settable
Output scale width	Recommended: 20-100% of the range; > 10 × resolution in any case
Enclosure	Die-cast aluminium, wall mount, protection class IP66
Dimensions	H120 × W125 × D57 mm
Operating environment	Industrial indoor and outdoor locations
Operating conditions	-20...+50 °C, 0.9...1,1 atm 15...90% RH non condensing Explosion-safe areas Non-aggressive atmosphere **NOTE!** We offer technical solutions for extreme humidity, please ask for more information
Relay option (ordering code R)	
Output relays	2 × SPST relays (closing contact), 250 VAC / 30 VDC, 5 A max
Default alarm setpoints	LOW: set 0.5 ppm, release 0.4 ppm HIGH: set 1 ppm, release 0.8 ppm
Other options	
Remote sensor probe	Protection IP65, shielded cable default cable length 3.0 m

Dimensions

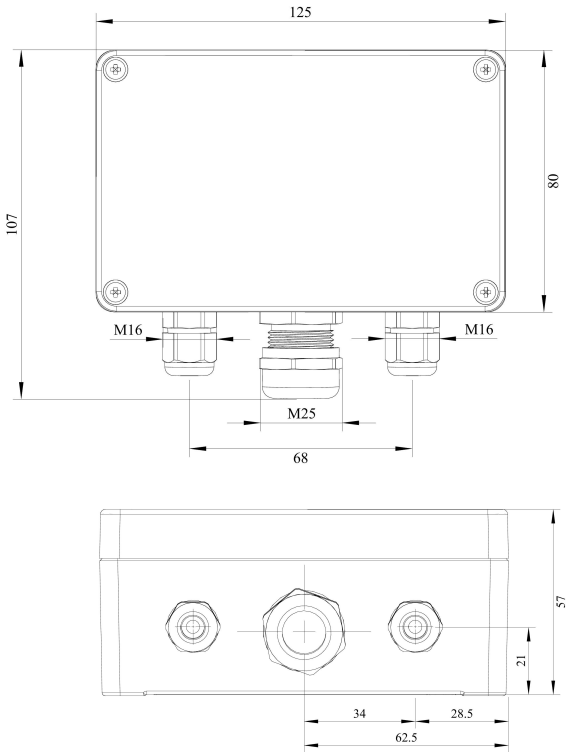

Ask for other versions or custom designed products

AKRIBIS · www.akribis.info · contacto@akribis.info

Connection diagrams

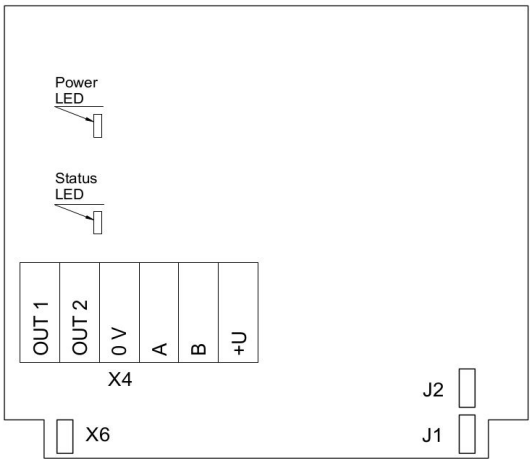

Version without PSU and relays

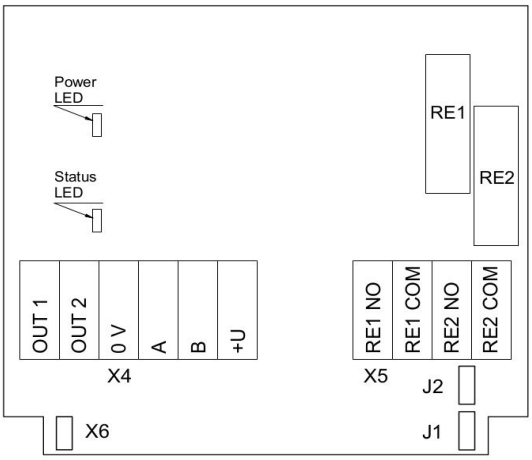

Version without PSU and with relays

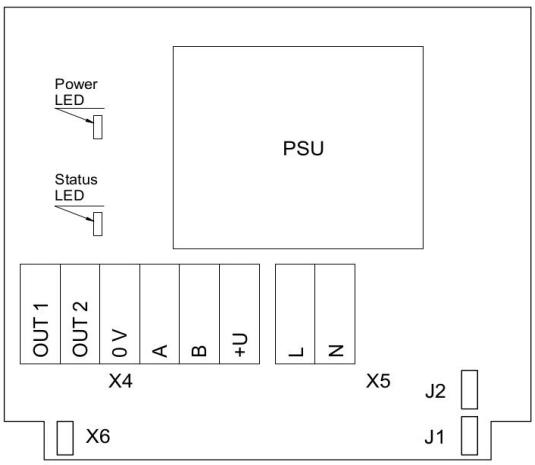

Version with PSU and without relays

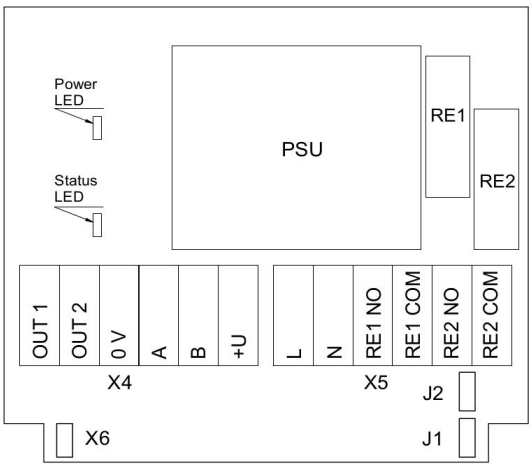

Version with PSU and relays

Jumpers

J1	OUT1 type (open: 4-20 mA; closed 0-10 V)
J2	OUT2 type (open: 4-20 mA; closed 0-10 V)
X6	Reset Modbus network parameters to default
X4 terminals	
OUT1	4-20 mA / 0-10 V output
OUT2	4-20 mA / 0-10 V output
0V	0 V / 24 VAC Neutral (optional)
A	RS485 A / Data +
B	RS485 B / Data -
+U	+24 VDC / 24 VAC Phase (optional)
X5 terminals (optional)	
L	90…265 VAC Phase
N	90…265 VAC Neutral
RE1 NO	Relay 1, normally open terminal
RE1 COM	Relay 1, common terminal
RE2 NO	Relay 2, normally open terminal
RE2 COM	Relay 2, common terminal

Remote probe

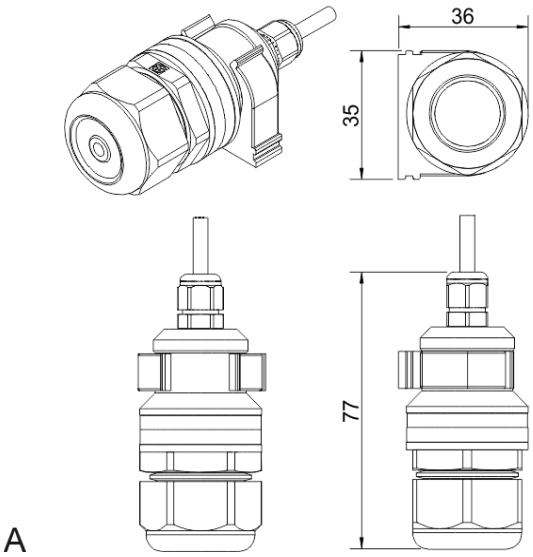

Wall mount remote probe with fixing clamp (default version)

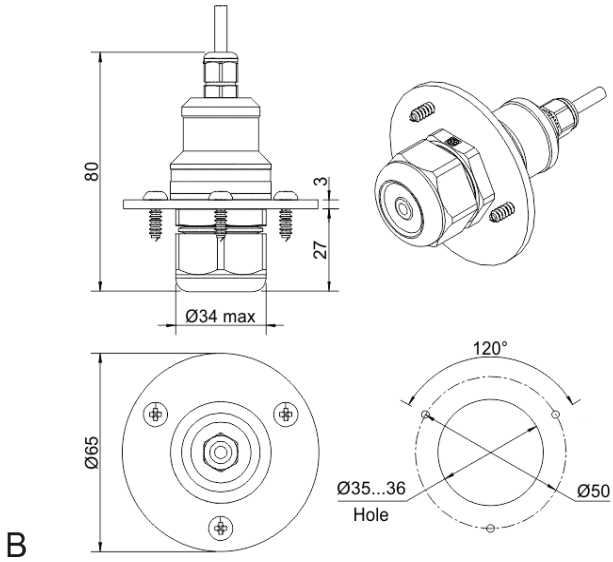

Remote probe with rubber flange and three self-tapping screws (on request)