DATASHEET

E2648

Evikon

Distributed by AKRIBIS

IP66 | 4-20 mA 0-10 V | RS485 Modbus

Solvent Vapours Detector-Transmitter E2648-PID

Features

- Accurate and stable measurement
- Industrial IP66 wall mount housing
- Two analog outputs settable to 4-20 mA or 0-10 V
- RS485 Modbus RTU digital interface
- Two relays for alarm / ventilation control (option)
- Attached or remote sensor

Specifications

Detected gases	VOCs with ionisation potential < 10.6 eV	
Default calibration	Isobutylene	
Sensor type	Photo ionization detector (PID)	
Sampling method	Diffusion	
	E2648-PID-40	E2648-PID-200
Detection range	0...40 ppm (isobutylene)	0...200 ppm (isobutylene)
Minimum detection level	0,01 ppm	1 ppm
Response time	< 3 s	
Sensor lifetime	> 5 years	
Maintenance interval	Monthly or more frequently depending on operating conditions	
Signal update	Every 1 second	
Self-diagnostics	Full functionality check at start-up	
Warm-up time	≤ 1 min	
Power supply options	12...36 VDC (default) 24 VAC or 230 VAC as options	
Power consumption	< 2 VA	
Digital interface	RS485, Modbus RTU protocol	
Analog outputs	2 × 4-20 mA / 0-10 V, user settable	
Output scale width	Recommended: 20-100% of the range; > 10 × resolution in any case	
Enclosure	Die-cast aluminium, wall mount, protection class IP66	
Dimensions	H120 × W125 × D57 mm	
Operating environment	Industrial indoor and outdoor locations	
Operating conditions	-40...+65°C; 0...95% RH non-condensing; 0,9...1,1 atm; Explosion-safe areas Non-aggressive atmosphere	

Dimensions

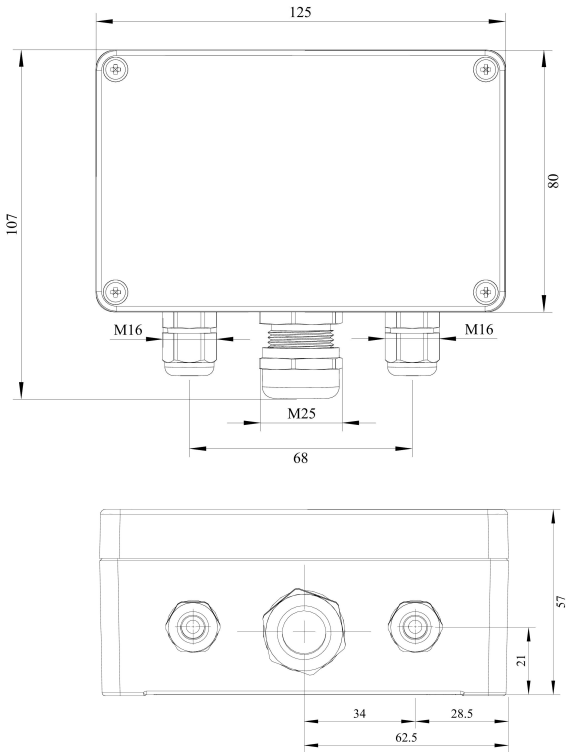

Relay option (ordering code R)

Output relays	2 × SPST relays (closing contact), 250 VAC / 30 VDC, 5 A max
Default alarm setpoints	Determined by user within 5-95% of the range

Other options

Remote sensor probe	Protection IP65, shielded cable default cable length 3.0 m

Ask for other versions or custom designed products

AKRIBIS · www.akribis.info · contacto@akribis.info

Connection diagrams

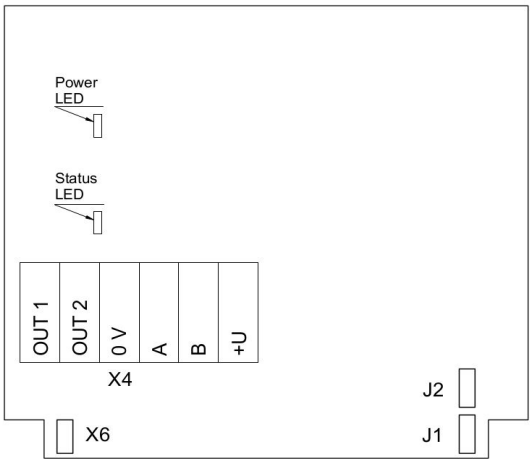

Version without PSU and relays

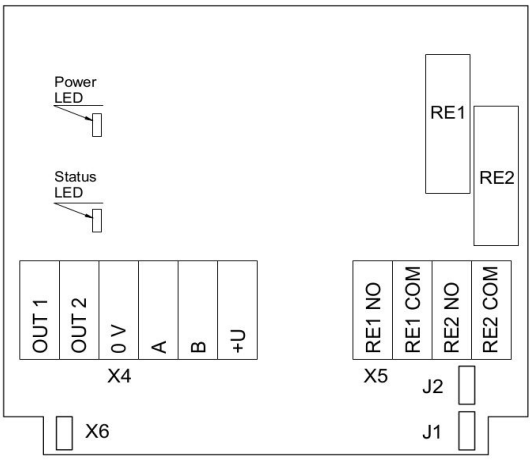

Version without PSU and with relays

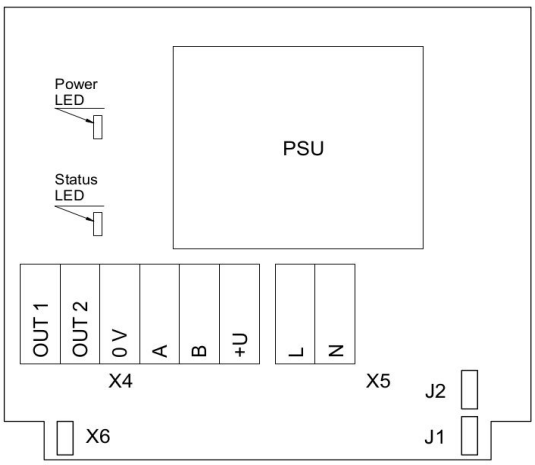

Version with PSU and without relays

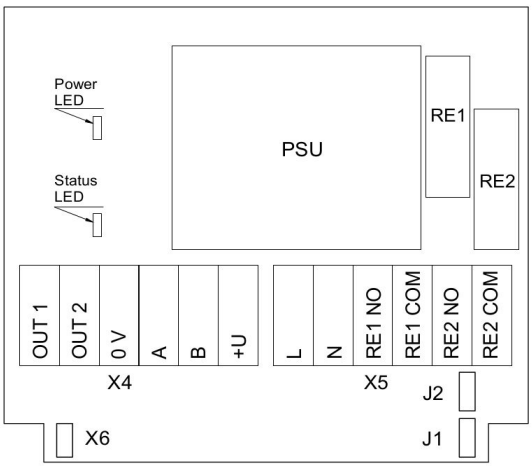

Version with PSU and relays

Jumpers

J1	OUT1 type (open: 4-20 mA; closed 0-10 V)
J2	OUT2 type (open: 4-20 mA; closed 0-10 V)
X6	Reset Modbus network parameters to default
X4 terminals	
OUT1	4-20 mA / 0-10 V output
OUT2	4-20 mA / 0-10 V output
0V	0 V / 24 VAC Neutral (optional)
A	RS485 A / Data +
B	RS485 B / Data -
+U	+24 VDC / 24 VAC Phase (optional)
X5 terminals (optional)	
L	90…265 VAC Phase
N	90…265 VAC Neutral
RE1 NO	Relay 1, normally open terminal
RE1 COM	Relay 1, common terminal
RE2 NO	Relay 2, normally open terminal
RE2 COM	Relay 2, common terminal

Remote probe

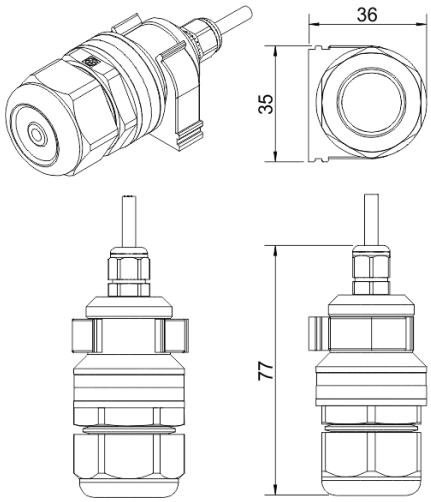

A

Wall mount remote probe with fixing clamp (default version)

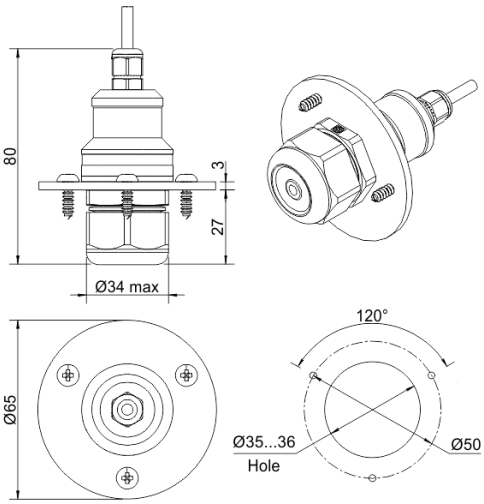

B

Remote probe with rubber flange and three self-tapping screws (on request)