USER GUIDE

E2639

Evikon

Distributed by AKRIBIS

PluraSens®

Sulfur Hexafluoride Detector

Sulfur Hexafluoride Detector with Smart Sensor

E2639-SF6

E2639-GSH with GSH-SF6

User Manual

Evikon

Table of contents

Specifications.... 5
Product description.... 7
Dimensions.... 9
Safety requirements.... 11
Operating conditions.... 11
Installation guidelines.... 12
Electrical connections.... 14
Sensor probe handling.... 18
Important notes.... 18
Filter replacement procedure.... 18
Smart sensor replacement (E2639-GSH version only).... 18
Remote probe option (E2639-GSH version only).... 19
Quick installation guide.... 20
Operation.... 21
Interaction with the detector.... 24
WiFi module (optional).... 25
Modbus safe mode and default communication settings.... 26
Faults and diagnostics.... 28
Sensor-related faults.... 29
Calibration-related faults.... 29
Power supply faults.... 30
Detector / system faults.... 30
Communication faults.... 31
Configuration.... 33
Maintenance.... 34
Calibration.... 34
Zero calibration.... 35
Slope calibration.... 36
Delivery set.... 36
Modbus RTU communication.... 38
RS485 communication interface.... 38

Communication parameters..... 38
Modbus registers..... 39
Disposal..... 47
Disclaimer..... 48
Warranty..... 48
Manufacturer contacts..... 48

Revision history

Revision	Release date	Comment
1	05.04.2026	
1.1	06.05.2026	SF_6-specific information added
1.2	13.05.2026	Conformity updated
1.3	14.08.2026	Remote probe length updated

Sulfur hexaflouride

Sulfur hexafluoride (SF_6) is a colorless, odorless, non-flammable synthetic gas that is non-toxic, except at extreme temperatures.

It is widely used as an electrical insulator, a protective cover gas in the magnesium industry to prevent combustion of molten magnesium, and in semiconductor manufacturing.

Chemical formula	SF_6
Molar weight	146.1
Relative density to air	5.03
Conversion	1 ppm = 5.98 mg/m^3
Boiling point	-63.9 °C
Flammability	Non-flammable
Odor	Odorless
Hazard	Non-toxic but may contain highly toxic sulfur pentafluoride (S_2F_{10}) as an impurity. Leaked hexafluoride in enclosed or low-lying areas can accumulate and displace oxygen. Electrical discharge may decompose to form toxic products. Extremely potent greenhouse gas.
Exposure limits TWA (OSHA PEL & NIOSH REL)	1000 ppm (6000 mg/m^3)

Conversion of ppm to mg/m^3 is at 25 °C and 1 atm.

Specifications

Sensor type	Dual-beam infrared (NDIR)
Sampling method	Diffusion
Typical detection ranges	0…1 000 ppm 0…2 000 ppm
Response time T90	< 30 s
Resolution/ Digital unit	1 ppm
Sensor lifetime	> 5 years
Self-diagnostic	Full functionality check at start-up
Warm-up time	≤ 1 min
Maintenance interval	12 months
Signal update	Every 1 second
Power supply	14...36 VDC (default), Optional: 24 VAC or 230 VAC
Power consumption	< 6 VA
Analog outputs	2 × 4-20 mA
Outputs assignment	OUT1 gas; OUT2 gas
Output scale width	> 10 × resolution Recommended: 5-100% of the detection range

Load resistance	R_L < (+U - 2 V) / 22 mA for 4-20 mA
Digital interface	RS485, Modbus RTU protocol; No galvanic isolation Optional: 2.4 GHz WiFi (802.11 b/g/n)
Cable connections	Screwless spring-loaded terminals
Enclosure	Grey ABS plastic, wall mount, protection class IP65
Dimensions	E2639 version with fixed sensor: H125 × W190 × D55 mm E2639-GSH with GSH Smart Sensor connected: H145 x W190 x D55 mm
Conformity	Directive 2014/30/EU, 2014/35/EU and 2014/53/EU, EN IEC 61010-1:2019, EN IEC 50270:2015, EN IEC 50271, EN IEC 62990-1:2022, EN IEC 60079-29-0:2026, ETSI EN 300 328 V2.2.2
Operating conditions	-20...+50 °C, 0...95 %RH Explosion-safe areas; pressure 0.9...1.1 atm; Non-aggressive atmosphere without condensation
Relays	
Output relays	3 × SPDT 250 VAC / 30 VDC, 3 A resistive loads 2 x electronic open-collector, 100 mA @ 24 VDC
Default alarm setpoints	Determined by the user within 5-95% of the detection range
Signalling	
Visual	4 × LEDs: 2 red, 1 yellow, 1 green (indicating pre-alarm, main alarm, fault, and power)
Acoustic alarm	Buzzer 85 dB

Product description

The E2639 and E2639-GSH gas detectors are part of the PluraSens® family of multifunctional measurement instruments, designed for reliable and precise gas monitoring across a wide range of industrial and commercial applications.

Both series offer robust performance, flexible configuration options, and seamless integration into existing control systems. While sharing a common platform and core functionality, the two models differ in key aspects such as sensor configuration, maintenance approach, and installation flexibility.

To facilitate a clear and structured comparison, each feature is categorized by feature type. This classification distinguishes between standard functionalities included in every unit, optional enhancements that can be configured based on application needs, and model-specific characteristics that define the differences between product variants. This approach ensures transparency and helps users quickly identify the capabilities and flexibility of each device.

Below are descriptions for each feature type.

Core feature

- A standard functionality included in all devices, forming part of the base configuration and available without additional options.

Optional feature

- An additional capability that can be included upon request or configuration, allowing customization of the device to meet specific application requirements.

Model feature

- A characteristic that differentiates product variants within the series, defining inherent design or functional differences between models.

The following table provides a detailed comparison of their features, highlighting the distinctions between the standard E2639 and the enhanced E2639-GSH version to support informed product selection.

Feature	Feature type	E2639	E2639-GSH
Sensor module	*Model feature*	Integrated, non-replaceable gas sensor module	Field-replaceable swappable pre-calibrated smart sensor modules
Remote probe option	*Model feature*	-	2.5m, 5m cable as standard
Acoustic signal	*Core feature*	Integrated 85 dB acoustic buzzer	
Analog outputs	*Core feature*	2 x independent 4-20 mA proportional to gas concentration	
Digital interface	*Core feature*	1 x RS-485 interface with dual terminals Protocol: Modbus RTU	
Electro-mechanical relays	*Core feature*	3 x SPDT relay outputs Pre-alarm, Main alarm, Status / Fault 250 VAC / 30 VDC, 3A resistive loads	
Open collector relay outputs	*Core feature*	2 x dedicated open-collector outputs 100 mA @ 24 VDC resistive loads	
Cable glands	*Core feature*	3 x M20 cable glands for electrical installation	
Power supply	*Optional feature*	**24 VDC as standard** 24 VAC, 230 VAC optional features	
Wireless interface	*Optional feature*	Wi-Fi interface module with integrated web-server for wireless configuration	

Dimensions

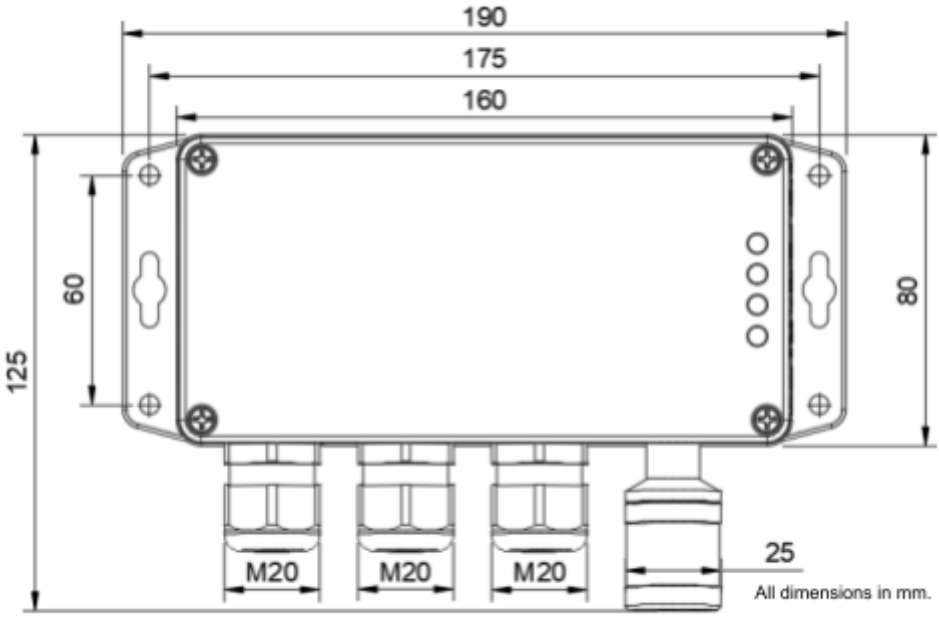

E2639 Front view

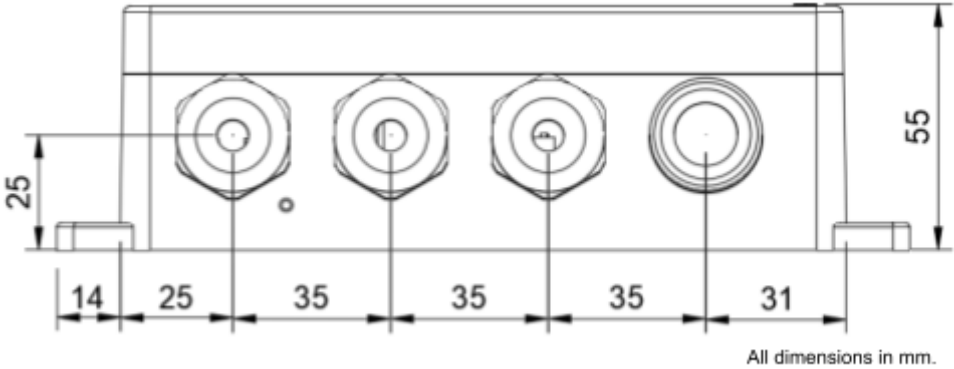

E2639 Bottom view

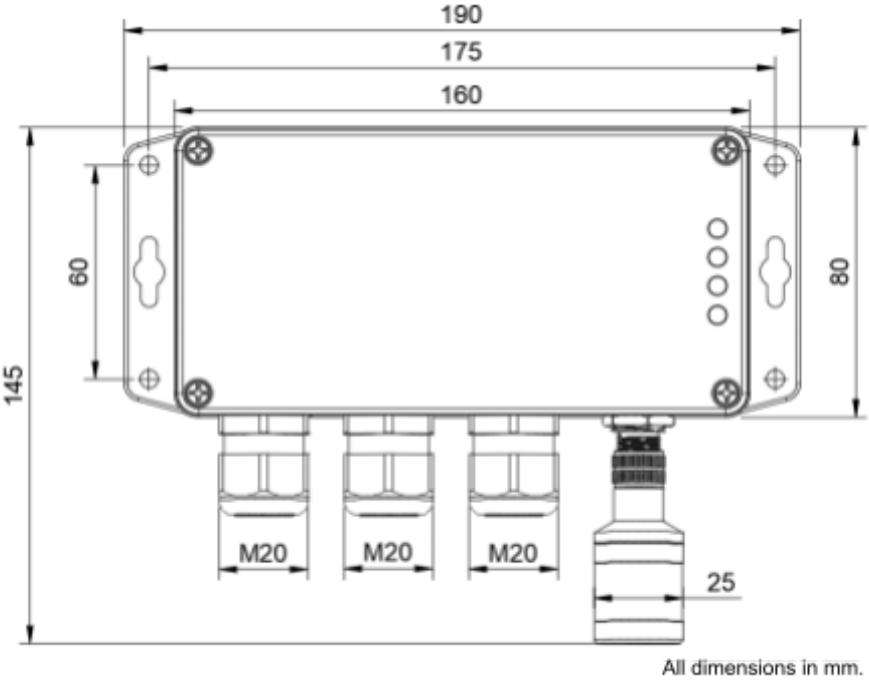

E2639-GSH Front view

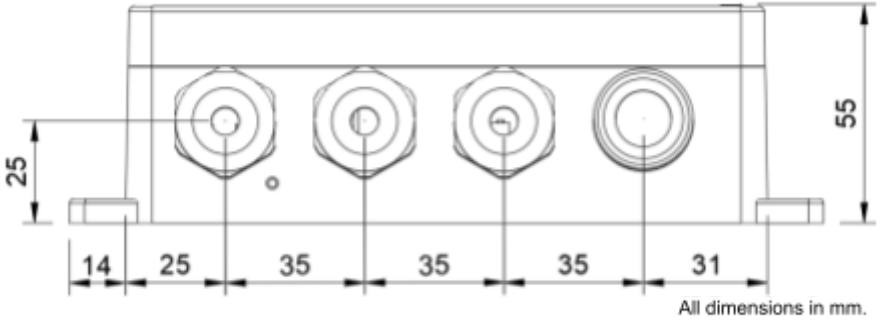

E2639-GSH Bottom view

Safety requirements

- ❗ Misuse will impair the protection of the product. Always adhere to the safety provisions applicable in the country of use.
- ❗ Do not perform any maintenance operation with the power on. Do not let water or foreign objects inside the device.
- ❗ Removal of the PCB from the enclosure voids the warranty. Do not touch the electronic components directly, as they are sensitive to static electricity.
- ❗ Connection diagrams can be found in the section “Electrical connections”. The device might not perform correctly or be damaged if the wrong power supply is connected.
- ❗ External circuits connected to the equipment should have a sufficient insulation rating according to the environmental conditions and equipment power.
- ❗ A clearly marked and easily accessible disconnecting device should be included in the installation of this product.

Operating conditions

The device should be used both in a non-hazardous area and in a commercial/light-industrial electromagnetic environment, where the latter is defined in EN IEC 50270.

Avoid strong mechanical shock and vibrations. Avoid corrosive atmospheres and areas highly contaminated with dust, oil mist, etc. Keep the instrument away from direct sunlight. A sudden temperature or humidity change might affect the sensitivity of the sensor.

Install the sensor probe in a vertical position with the sensor tip pointing downward. This mounting orientation helps prevent condensed water from accumulating on the protective filter and supports reliable operation.

Installation guidelines

Before proceeding with the installation, it is mandatory to read the section “Safety requirements” and make sure to comply with all listed instructions. Installation standards EN IEC 60079-29-2 and EN IEC 62990-2 are also recommended for further instructions and related information about the installation. During the installation of the detector, the following points must be considered:

- Application (air quality control or leakage detection)
- Properties of the space under investigation (room geometry, direction, and velocity of airflows, etc.)
- Sulfur hexafluoride is considerably heavier than air. The sensor should be located below or close to the source
- The device should be accessible for maintenance and repair

The conditions mentioned above will affect the device's coverage area. However, the coverage area for a detector is 2.5 - 5 m radius.

For early leakage detection, install the sensor as close as possible to the potential leakage sources (flanges, valves, pressure reducers, pumps, etc.), taking into consideration other points listed above.

For general area monitoring without definite leakage sources, the detectors should be distributed evenly in the room.

For personal safety control, the detectors are installed in the breathing zone (at head height for people or animals). The recommended sensor position is vertical, pointing downwards.

For installation, attach the device to the wall using the provided screws through the side mounting holes or key slots (see chapter *Dimensions*).

Electrical connections

The electrical connection diagrams provided in this manual are also laser-engraved on the inner side of the detector cover. This ensures that wiring information is always readily available during installation and servicing, allowing for quick and convenient reference without the need to consult external documentation.

The device is equipped with internally connected double terminals for both the RS485 interface and the 24 VDC power supply. This design enables straightforward daisy-chain wiring of the RS485 communication line together with the 24 VDC power bus using a 4-wire configuration. As a result, multiple devices can be connected in chains efficiently without the need for additional junctions or external distribution components.

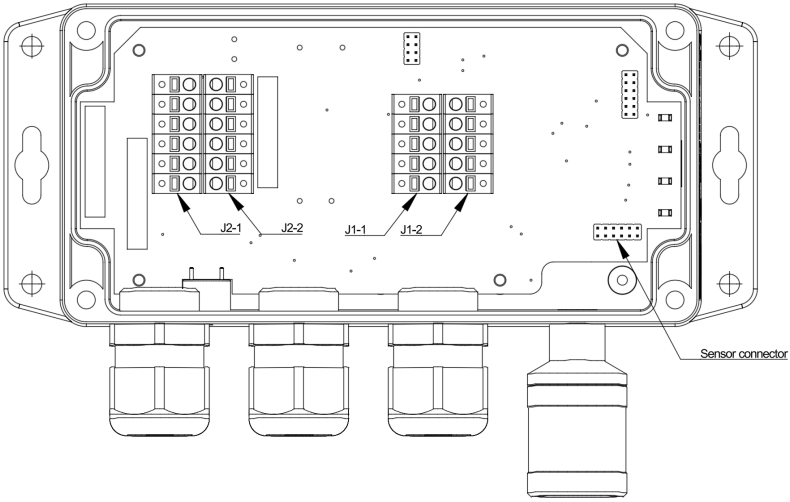

Detector version with 24 V DC power supply and without WiFi Module

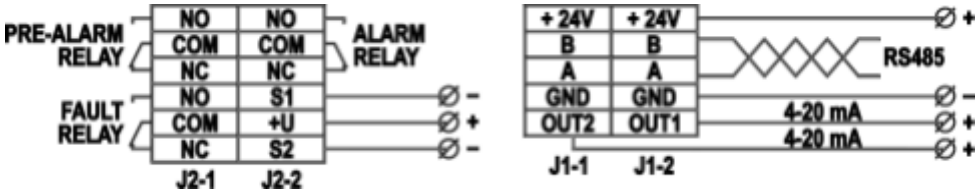

Electrical connections for version without 230 VAC PSU

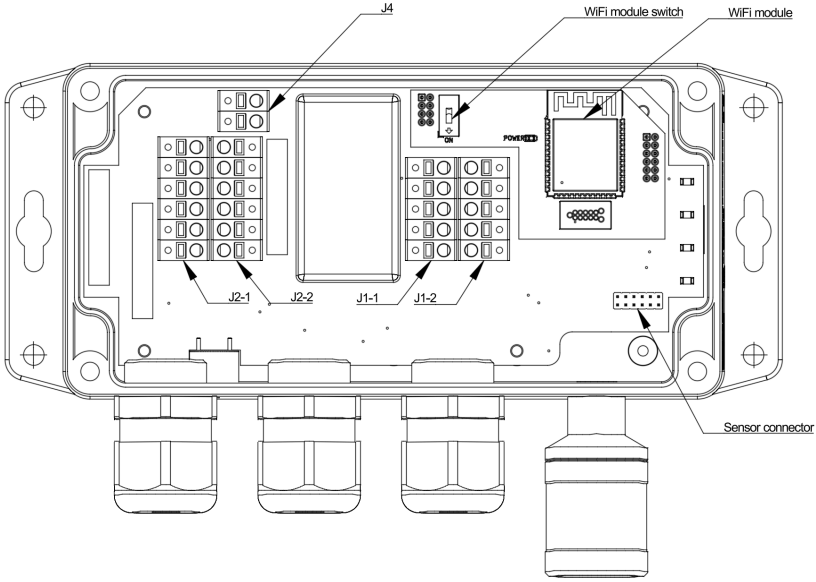

Detector version with 230 VAC PSU and WiFi module

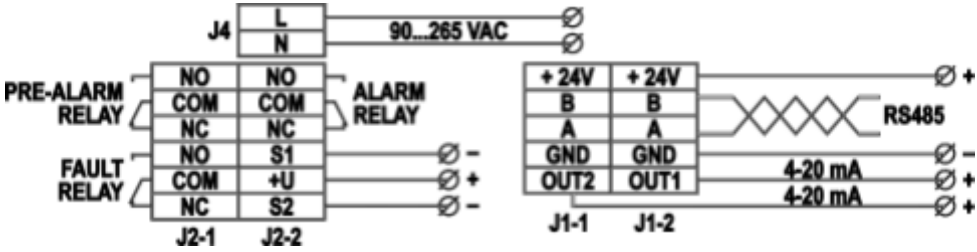

Electrical connections for version with 230 VAC PSU

The following table describes the terminal block layout and provides a detailed overview of all electrical connections available on the device. It identifies each terminal and its function for power supply, communication interfaces, analog outputs, and relay signals. The terminal arrangement is designed to support flexible integration into external control and monitoring systems, including PLCs, building management systems (BMS), and other automation equipment. Proper wiring in accordance with this table ensures correct device operation, reliable signal transmission, and safe interaction with connected systems.

Terminal block	Terminal	Meaning
J1-1	**+24V**	+24 VDC / 24 VAC Phase (optional)
	B	RS485 B / Data -
	A	RS485 A / Data +
	GND	GND
	O2	4-20 mA output channel 2
J1-2	**+24V**	+24 VDC / 24 VAC Phase (optional)
	B	RS485 B / Data -
	A	RS485 A / Data +
	GND	GND
	O1	4-20 mA output channel 1
J2-1	**NO**	Pre-alarm (Alarm 1) relay NO contact
	COM	Pre-alarm (Alarm 1) relay COM contact
	NC	Pre-alarm (Alarm 1) relay NC contact
	NO	Fault relay NO contact
	COM	Fault relay COM contact
	NC	Fault relay NC contact

J2-2	**NO**	Alarm (Alarm 2) relay NO contact
	COM	Alarm (Alarm 2) relay COM contact
	NC	Alarm (Alarm 2) relay NC contact
	S1	Pre-Alarm (Alarm 1) GND out
	DC	24 V OUT
	S2	Alarm (Alarm 2) GND out
J4 (optional)	**L**	90…265 VAC Phase
	N	90…265 VAC Neutral

All electrical connections should be performed in accordance with applicable standards and installation requirements.

Sensor probe handling

Sensor probes are fitted with a hydrophobic microporous PTFE filter that protects the sensing element from dust, dirt, and water droplets. Replace the filter if it becomes heavily contaminated.

Important notes

- Handle the filter carefully during replacement. Do not damage, deform, or puncture the filter material.
- Operation without the filter may result in incorrect readings and may damage the sensor.
- Sensor modules in fixed sensor versions are not user-replaceable.
- Replacement or servicing of sensing elements must be carried out by the manufacturer only.

Filter replacement procedure

1. Unscrew the sensor head cap carefully.
2. Remove the contaminated PTFE filter from the cap.
3. Take a new replacement filter. Ensure that the glued outline is properly aligned with the corresponding seating surface in the sensor head cap.
4. Insert the new filter into the cap and press it gently into place.
5. Reinstall the sensor head cap and tighten it securely.

NOTE! Never stab or press the filter while the cap is installed, since this may damage the sensor. Do not remove the filter, as it may cause the device to show incorrect values and/or break the sensor.

Smart sensor replacement (E2639-GSH version only)

1. Disconnect the installed GSH smart sensor from the M12 connector.
2. Connect the replacement GSH smart sensor to the M12 connector.
3. Ensure that the connection is secure.

GSH smart sensors can be swapped/replaced by the user when necessary.

Remote probe option (E2639-GSH version only)

- E2639-GSH models are also available with a remote probe option.
- The remote probe is connected to the main unit using a shielded cable.
- Standard cable lengths are 3 m and 5 m

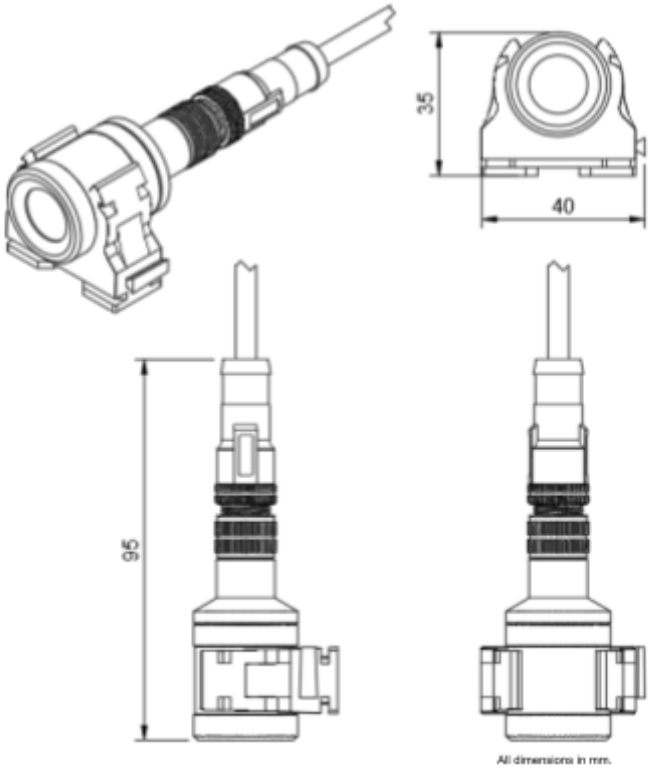

Wall mount remote probe with fixing clamp.

Quick installation guide

Unscrew four lid screws and detach the lid from the device. The electrical connection diagrams are laser-engraved on the inner side of the detector cover.

Use 3 x M20 cable glands to let in the cables of the power supply and of the external devices. Without turning on the power, plug the power cable, and connect the analog/relay outputs and/or digital interface terminals to the necessary devices according to the relevant connection diagram.

The screwless quick-connect spring terminals on the E2639 series devices are suitable for a wide range of wires with a cross-section of 0.2...1.5 mm^2. We recommend stripping the wire end by 8...9 mm and using wire end sleeves.

To connect the wire, insert the wire end into the terminal hole. To disconnect, push the spring-loaded terminal lever, pull the wire out, and release the lever.

Use a twisted-pair cable, e.g., LiYY TP 2×2×0.5 mm^2 or CAT 5, to connect the device to the RS485 network. A and B on the device represent DATA+ and DATA-, respectively. Polarity must be respected when connecting to an external RS485 network.

NOTE! The outputs are not galvanically isolated from the external power supply and share a common ground.

To power the instrument from an external power source, connect terminals GND and +24V to the source. If the integrated mains power supply option is used, connect terminals L and N to the mains and use GND terminal for common ground for the RS485 digital interface.

NOTE! Actuator short-circuits should be avoided. To protect the instrument relays, use external fuses or safety switches.

Power the device on and ensure that the green LED is illuminating. If the yellow LED stops illuminating while green LED stays on the device has entered normal operation mode.

Operation

The E2639 gas detector continuously monitors gas concentration using an integrated sensor module or an external smart sensor module, depending on the model. The measured signal is processed by the detector system and then evaluated to control the following functionalities:

- Visual indications (LEDs)
- Audible signals (Integrated buzzer)
- Electrical outputs (Relays and 4-20 mA analog outputs)
- Communication data (Modbus RTU and optional WiFi interface)

After power is applied, the device automatically starts and performs an internal functionality check. During this time, the sensor begins to stabilize and the system prepares for normal operation. The warm-up phase is typically 1 minute, while full sensor stabilization for maximum accuracy may take up to 15 minutes.

During startup, the device indicates its status using 4 distinct integrated LEDs. Once the initialization has been finished successfully, the detector enters normal operation mode and begins continuous gas monitoring.

In normal operation, the device continuously measures the gas concentration and compares the measured value against two configurable alarm and analog output thresholds. Based on this evaluation, the device controls its outputs, including relays, analog signals, LEDs, and the integrated audible buzzer. Measurement processing and output updates are performed cyclically once per second.

By default, alarm behavior is defined by the selected alarm mode and setpoint conditions. Alarm activation and reset depend on the configured threshold logic for the measured gas concentration. The device also allows configuration of latchable alarm behavior, requiring manual reset after an alarm event. In addition, alarm relays can be configured for fail-safe operation, where the relay is energized during normal operation and de-energized in alarm.

The device continuously monitors its operation and internal functions to ensure reliable performance during normal use. If a non-normal operating condition or internal diagnostic event is detected, the device indicates the status LED, fault relay, analog output signal, and communication interfaces. In this condition, the device continues to signal the fault until the issue is resolved.

The device includes a calibration mode used to ensure accurate measurement of gas concentration. During calibration, normal alarm behavior can be temporarily inhibited, and the device indicates its status through dedicated LED signals.

For maintenance and verification purposes, a test mode is available in the detector system. In this mode, outputs such as relays, LEDs, and analog outputs can be controlled manually without the presence of gas. This allows the user to verify correct system operation in a safe environment.

The presence of the power supply of the device is indicated by the green LED. When the green LED is on, the device is powered on. Additional LED indicators provide information about alarms and device status:

- The yellow LED indicates special operating conditions and faults
- The red LEDs indicate pre-alarm and main alarm conditions

LED symbols and their meaning are presented in the following table:

LED symbol	Color	Meaning
	Red	Alarm LED (Alarm 2)
	Red	Pre-alarm LED (Alarm 1)
	Yellow	Status / Fault LED
	Green	Power LED

The status / fault LED and buzzer response to different operation modes are presented in the following table:

Mode	Status / Fault LED mode	Buzzer mode
Hardware fault (non recoverable)	Constant on	Off
Wifi toggled	Blinks (2 Hz) for 5 seconds (50% on, 50% off)	Off
Sensor fault or calibration fault	Blinks 0.5 Hz (50% on, 50% off)	Beeps 1Hz (10% on, 90% off)
Sensor initializing or calibration mode	Blinks 1 Hz (10% on, 90% off)	Off
Zero or slope calibration active	Blinks 1 Hz (50% on, 50% off)	Off
Calibration accepted	Blinks 2 Hz (50% on, 50% off)	Off

The alarm LEDs (red) and buzzer response to different processes is presented in the following table:

Mode	Alarm LED mode	Buzzer mode
Alarm ready for reset	On	Off
Alarm failure or inhibited	Blinks 1 Hz (10% on, 90% off)	Off
Pre-alarm (Alarm 1) active	Blinks 1 Hz (50% on, 50% off)	Beeps 1 Hz
Alarm (Alarm 2) active		Beeps 2 Hz

Interaction with the detector

The detector can be operated using a magnetic switch located on the right-hand side of the detector (when the probe is facing downward), behind the device label. This switch allows the user to perform basic interaction functions without opening the unit.

To activate the magnetic switch, place the magnetic key on the marked area between the Evikon logo and the website address, distinguished with a specific icon. The duration of activation determines the function performed by the detector.

The correct position is shown in the figure below.

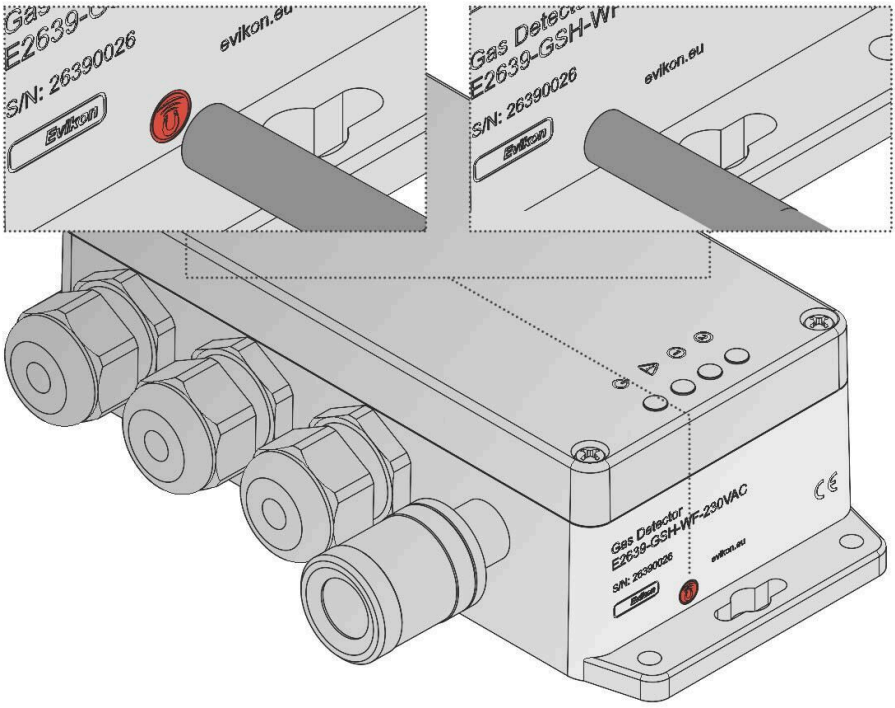

Duration	Function	Description
2 seconds (Short)	Operational control	Resets active latchable alarms that are in a releasable state. Silences the audible alarm until the next alarm event if not already acknowledged. If a measurement-related fault is present, the measurement process is reinitialized.
5 seconds (Long)	WiFi control	Toggles the WiFi access point (if installed). Enables the access point for configuration if disabled, or disables it if already active.

A short 2-second activation is primarily used for alarm handling and device recovery functions.

A longer 5-second activation is used to enable or disable the WiFi interface for configuration and monitoring.

NOTE! The WiFi control action includes the short activation behavior. As a result, alarms may be reset or silenced before the WiFi function is executed.

WiFi module (optional)

The unit can be equipped with an optional WiFi module, which provides wireless access to the detector for configuration, testing, and calibration.

Before using the WiFi functionality, ensure that the switch on the WiFi module is set to the ON position. The WiFi access point can then be enabled using the magnetic switch, as described in the "*Interaction with the detector*" chapter.

Once enabled, the module creates its own WiFi access point, allowing direct connection without additional network infrastructure. The access point name is in the format **E2639-XXXXXXXX**, where *XXXXXXXX* corresponds to the serial number of the detector.

After connecting to the access point, the user can access the integrated web interface. This interface provides a convenient way to commission and configure

the device, with measurement data and status information updated automatically at regular intervals.

Through the web interface, the user can, depending on user's access level:

- Configure communication parameters, alarm settings, and analog outputs
- Perform functional testing of relays and analog outputs
- Initiate and complete sensor calibration procedures, including downloading a calibration certificate

For security and energy efficiency, the WiFi access point is automatically disabled after 10 minutes of inactivity. It can be re-enabled at any time using the magnetic switch.

Modbus safe mode and default communication settings

The detector includes a *Modus safe mode* that allows access to the device when the communication settings are unknown, without changing the current configuration. This is intended for maintenance situations where the Modbus parameters of the unit are unknown.

Modbus safe mode can be activated during the detector startup sequence. To enter Modbus safe mode, place the magnetic key on the magnetic switch and hold it for 2 seconds after turning on the device. When activated, the unit starts with default communication parameters, allowing connection using default Modbus settings.

In this mode, the actual RS485 and Modbus configuration parameters of the device can be read, but they cannot be modified. This ensures that the existing configuration is not unintentionally changed during troubleshooting or commissioning.

After communication has been established with the device, safe mode can be exited via communication by sending the appropriate command to the unit or

through restart. Once exited, the detector resumes operation using its original communication settings.

If the configuration is invalid or cannot be applied, the device remains in safe mode until the issue is resolved. If required, the communication parameters can be restored to factory default values. This is typically used when the current configuration is unknown or invalid.

To restore factory default communication settings:

1. Enter safe mode as described above
2. Send the reset command

E2639 series gas detector default communication parameters are listed in following table:

Parameter	Default value
Slave ID	1
Baud rate	9600
Parity	None
Data bits	8
Stop bits	1
Response delay	10 ms

Faults and diagnostics

Detector continuously monitors its operation and sensor performance to ensure reliable functionality. If a fault condition is detected, the device indicates this through the yellow status LED, relay outputs, and communication interfaces.

In fault conditions, gas measurement or detector operation may be affected and should not be relied upon until the issue is resolved. Depending on the severity of the fault, the unit may enter a safe state in which relays are de-energized and the detector attempts to automatically restart its operation.

The fault relay is configured as a fail-safe output. Under normal operation, the relay is energized. In the event of a fault condition or loss of power, the relay is de-energized, allowing external systems to detect both detector faults and power failures.

Indication method	Behavior
Yellow status LED	Indicates fault or special operating condition (steady or blinking depending on state)
Fault relay	De-energized in fault condition or power loss (fail-safe behavior)
Analog outputs	May signal fault condition depending on configuration
Modbus / WiFi interface	Fault status and diagnostic information available

In case of persistent fault conditions, the device should be removed from operation and inspected by qualified personnel.

Sensor-related faults

The device detects abnormal sensor behavior or invalid measurement values.

Possible causes

- Sensor degradation or failure
- Disconnected or improperly connected sensor
- Blocked or contaminated filter
- Exposure to extreme environmental conditions

Recommended action

- Inspect the sensor and filter condition
- Replace the filter if contaminated
- Restart the device
- Replace the sensor or contact service if the issue persists

Calibration-related faults

The calibration procedure failed or resulted in invalid parameters.

Possible causes

- Incorrect calibration gas concentration
- Unstable environmental conditions during calibration
- Calibration values outside acceptable limits

Recommended action

- Repeat calibration under stable conditions
- Verify calibration gas and application method

- Ensure sufficient stabilization time

Power supply faults

The supply voltage is outside the permitted operating range.

Possible causes

- Incorrect power supply
- Voltage drop or unstable power source
- Wiring issues

Recommended action

- Verify supply voltage and specifications
- Check wiring and connections
- Ensure stable power source

Detector / system faults

Internal error detected during initialization or operation.

Possible causes

- Internal hardware malfunction
- Initialization failure
- Invalid configuration

Recommended action

- Power cycle the device
- Verify configuration settings
- Contact technical support if the issue persists

Communication faults

The communication interface is not functioning correctly.

Possible causes

- RS485 wiring or polarity issue
- Incorrect communication parameters
- WiFi module disabled or malfunctioning

Recommended action

- Check wiring and polarity
- Verify communication settings
- Restart device or interface

Detector uses visual, audible, relay, and analog output signals to indicate different operating and fault conditions. These signals allow quick identification of the device status and enable reliable integration into external control systems.

The following table provides a general overview of common situations handled in the system of the gas detector.

Condition	Yellow LED	Buzzer	Fault relay	4–20 mA output
Normal operation	OFF	OFF	Energized	Proportional (4–20 mA)
Sensor initializing	Blinks 1 Hz (10% ON)	OFF	Energized	Fixed value (startup)
Calibration mode	Blinks 1 Hz (10% ON)	OFF	Energized	Fixed value
Zero / span calibration active	Blinks 1 Hz (50% ON)	OFF	Energized	Fixed value
Calibration accepted	Blinks 2 Hz (50% ON)	OFF	Energized	Returns to normal
Sensor fault / calibration fault	Blinks 0.5 Hz (50% ON)	Beeps 1 Hz (10% ON)	De-energized	3.5 mA or 21.5 mA
Hardware / system fault	ON (steady)	OFF	De-energized	0 mA
Alarm inhibited / special state	Blinks 1 Hz (10% ON)	OFF	Energized	Proportional

Configuration

Detectors can be configured using a configurator software provided by the manufacturer, offering a user-friendly interface for setting up and adjusting device parameters.

A standard configuration kit typically includes a USB-RS485 converter, a fixed flow regulator, gas tubing with an applicator, and the configuration software. These accessories allow both configuration and calibration procedures to be performed efficiently.

Once connected, the configurator enables the user to access core features and modify key settings, including:

- Alarm setpoints and release points
- Relay behavior
- Analog output scaling
- Communication parameters
- Testing of outputs

The configuration is performed via Modbus communication, which is handled automatically by the configurator software. This allows the user to configure the device without directly interacting with Modbus RTU registers.

For advanced configuration or system integration, detailed Modbus communication information is provided in the corresponding section of this manual “Modbus RTU communication”.

Maintenance

- ! Do not perform any maintenance operation with the power on.
- ! Clean the device with a soft, damp cloth.
- ! Do not use any abrasive cleaning agents.
- ! Do not immerse the device in water or any cleaning media.
- ! Regular inspection of the sensor probe and filter is recommended to ensure reliable operation.
- ! Replace the filter if it becomes contaminated.

Typical calibration intervals are up to 6 months, depending on the application.

Calibration

The detector is factory-calibrated using standard gas mixtures prior to delivery and is ready for use upon installation. Calibration ensures that the measured gas concentration remains accurate over time. Depending on the sensor type and operating conditions, periodic calibration is required to maintain measurement reliability.

Calibration can be performed using appropriate calibration gas and suitable equipment. A standard configuration kit, including a flow regulator and gas applicator, is typically used for this purpose.

During calibration, the detector enters a dedicated mode in which measurement values can be adjusted. During calibration, alarm outputs can also be inhibited on request to prevent false alarms. The device indicates calibration status through status LED and digitally through RS485 interface using Modbus RTU protocol.

Two types of calibration can be performed on the unit:

- **Zero calibration**, which adjusts the baseline measurement in clean air or reference conditions
- **Span (slope) calibration**, which adjusts the response of the sensor to a known gas concentration

Calibration can be initiated using the configurator software or via the optional WiFi interface, if available. After calibration is accepted by the user, the detector saves new calibration parameters and automatically returns to normal operation.

For best results, calibration should be performed under stable environmental conditions and using verified calibration gas. If there is any uncertainty regarding calibration requirements or procedures, contact the manufacturer or an authorized service provider.

At any stage during calibration state, the user is able to revert back to previous calibration parameters by declining the current calibration results. Only after accepting the calibration does the detector save the new calibration parameters to internal memory. This allows easy reversal of the calibration if the user has made an error during the calibration.

Calibration should be performed in the following situations:

- After the installation and commissioning of the device
- After the replacement of the sensor or filter
- If measurement readings are suspected to be inaccurate
- After exposure to high gas concentrations or potentially contaminating substances
- According to the defined maintenance schedule or applicable regulations

Zero calibration

Calibration requirements

Use:

- Synthetic air or
- Clean ambient air or
- Pure Nitrogen (99% N_2)

Slope calibration

Slope calibration (span calibration) is used to adjust the detector response to a known concentration of SF_6 gas to ensure measurement accuracy across the operating range.

Calibration requirements

- Use only certified calibration gas with a known SF_6 concentration
- Calibration gas concentration within 30–80% of the detector measurement range
- Certified gas cylinder with a valid calibration certificate
- Calibrate typically close to your alarm points for best accuracy
- Appropriate flow regulator and application accessories

NOTE! Calibration records should be maintained in accordance with site procedures and applicable regulations.

Delivery set

E2639 version with fixed sensor:

- Detector E2639
- 2 blanking elements for unused cable glands
- Magnetic key
- Mounting accessories:
    - 4 screws with plastic dowels

E2639-GSH:

- E2639-GSH main unit
- 2 blanking elements for unused cable glands
- Magnetic key
- Mounting accessories:
    - 4 screws with plastic dowels

GSH-SF6 Smart sensor:

- GSH-SF6 Smart Sensor
- Cable for remote probe version
- Mounting accessories:
    - Fixing clamp for the remote probe version

Modbus RTU communication

RS485 communication interface

COM options	Modbus functions
Databits: 8 Parity: none / odd / even Stop bits: 1 or 2 Protocol: Modbus RTU	03 – Read multiple registers 06 – Write a single register

Communication parameters

Parameter	Permitted values	Default
Supported baud rates	1200, 2400, 4800, 9600, 19200, 38400, 57600	9600
Data bits	8	8
Parity	none / even/ odd	none
Stop bits	1, 2	1
Protocol	Modbus RTU	
Modbus functions	03 - Read holding registers 04 - Read input registers 06 - Write a single holding register	
Error codes	01 – Illegal function 02 – Illegal data address 03 – Illegal data value 04 – Slave device failure	

Modbus registers

Register addresses are shown 0-based, Address in hexadecimal, Register in decimal format.

Address	Register	RW*	IH**	Description	Supported values (dec)	Default
0x0001	1	R	IH	Hardware ID		2639
0x0002	2	R	IH	Serial number		-
0x0004	4	RW	H	Slave ID ***	1...247	1
0x0005	5	RW	H	Baudrate ***	1200, 2400, 4800, 9600, 19200, 38400, 57600	9600
0x0006	6	RW	H	Delay, ms ***	1...255	10
0x0007	7	RW	H	Parity ***	0 = NONE 1 = EVEN 2 = ODD	0
0x0008	8	R	H	Data bits	8	8
0x0009	9	RW	H	Stop bits ***	1 = 1 STOP BIT 2 = 2 STOP BITS	1
0x000A	10	R	IH	Software version		-
0x00A0	160	RW	H	Sensor operational state control	0 = Sensor not initialized 1 = Sensor post-initialization 2 = Sensor in startup phase 3 = Sensor ready in operation 4 = Sensor fault 5...11= Reserved WRITE 42330 - Reinitialize sensor	-

0x00A7	167	RW	H	Change rate	0...+32767	0
0x00A8	168	RW	H	Averaging constant, s	0...+32767	10
0x00CD	205	R	IH	Analog output state	0 - Analog output OFF 1 - Analog output running 2 - Analog output in test 3 - Reserved 4 - Analog output failure	1
0x00D3	211	R	I	Alarm 1 output state	0 = Alarm output is inactive (e.g., relay output not in alarm state). 1 = Alarm output is active (e.g., relay output in alarm state). 2 = Alarm output is in a failure state.	-
0x00D4	212	R	I	Alarm 2 output state	0 = Alarm output is inactive (e.g., relay output not in alarm state). 1 = Alarm output is active (e.g., relay output in alarm state). 2 = Alarm output is in a failure state.	-
0x00D5	213	RW	IH	Alarm 1 status	WRITE 0xA00A - Inhibits alarm, which pauses alarm detection for 900 seconds 0xA11A - Resumes alarm from inhibit READ	0

					-1 = Alarm is in a failed state due to an internal error or invalid configuration. 0 = Alarm is disabled and will not respond to detection conditions. 1 = Alarm is idle; no active detection condition. 2 = Alarm condition is detected, waiting for switching delay to elapse. 3 = Alarm is active, enforcing a minimum ON time before transitioning to ACTIVE. 4 = Alarm is fully active and monitoring for release conditions. 5 = Alarm is latched and will not deactivate unless reset manually. 6 = Alarm is eligible for reset after a latched condition clears. 7 = Alarm is deactivating, enforcing a minimum OFF time before returning to IDLE or DELAY.	
0x00D6	214	RW	IH	Alarm 2 status	WRITE 0xA00A - Inhibits alarm, which pauses alarm detection for 900 seconds 0xA11A - Resumes alarm from inhibit READ	0

					-1 = Alarm is in a failed state due to an internal error or invalid configuration. 0 = Alarm is disabled and will not respond to detection conditions. 1 = Alarm is idle; no active detection condition. 2 = Alarm condition is detected, waiting for switching delay to elapse. 3 = Alarm is active, enforcing a minimum ON time before transitioning to ACTIVE. 4 = Alarm is fully active and monitoring for release conditions. 5 = Alarm is latched and will not deactivate unless reset manually. 6 = Alarm is eligible for reset after a latched condition clears. 7 = Alarm is deactivating, enforcing a minimum OFF time before returning to IDLE or DELAY. 8 = Alarm is inhibited (manually or by logic) and will not respond to detection conditions.	
0x00D7	215	RW	H	Alarm 1 Switching delay, s	0...32000	10

0x00D8	216	RW	H	Alarm 2 Switching delay, s	0...32000	10
0x00D9	217	RW	H	Alarm 1 Minimal ON/OFF time, s	0...32000	10
0x00DA	218	RW	H	Alarm 2 Minimal ON/OFF time, s	0...32000	10
0x00DB	219	RW	H	Alarm 1 Logic	0 = No alarm logic applied. The alarm remains inactive. 1 = Alarm triggers when the value is above the setpoint and resets when it drops below the release point. 2 = Alarm triggers when the value is below the release point and resets when it rises above the set point. 3 = Alarm triggers when the value is within the range. 4 = Alarm triggers when the value is outside the range.	1
0x00DC	220	RW	H	Alarm 2 Logic	0 = No alarm logic applied. The alarm remains inactive. 1 = Alarm triggers when the value is above the setpoint and resets when it drops below the release point. 2 = Alarm triggers when the value is below the release point and resets when it rises above the set point.	1

					3 = Alarm triggers when the value is within the range. 4 = Alarm triggers when the value is outside the range.	
0x00DD	221	RW	H	Alarm 1 Low setpoint	-32768...32767	500
0x00DE	222	RW	H	Alarm 1 High setpoint	-32768...32767	1000
0x00DF	223	RW	H	Alarm 2 Low setpoint	-32768...32767	1500
0x00E0	224	RW	H	Alarm 2 High setpoint	-32768...32767	2000
0x00E1	225	RW	H	Reset alarms	WRITE 0xA00A - Resets both alarms if possible, silences buzzer if in alarm	-
0x00E2	226	RW	H	Alarm 1 reset type	0 = Automatic (alarm clears automatically when the alarm condition clears and timing constraints are met). 1 = Latching (alarm stays active until manually reset, even after the alarm condition has cleared).	0
0x00E3	227	RW	H	Alarm 2 reset type	0 = Automatic (alarm clears automatically when the alarm condition clears and timing constraints are met).	0

					1 = Latching (alarm stays active until manually reset, even after the alarm condition has cleared).	
0x00E4	228	RW	H	Invert Alarm 2 relay	0 = Relay energized on Alarm active 1 = Relay de-energized on Alarm active	0
0x00E5	229	RW	H	Invert Alarm 1 relay	0 = Relay energized on Alarm active 1 = Relay de-energized on Alarm active	0
0x0103	259	R	IH	Sensor gas concentration value	-	-
0x0105	261	RW	H	OUT 1 Digital value at 4 mA	-32768...32767	0
0x0106	262	RW	H	OUT 1 Digital value at 20 mA	-32768...32767	100
0x0107	263	RW	H	OUT 2 Digital value at 4 mA	-32768...32767	0
0x0108	264	RW	H	OUT 2 Digital value at 20 mA	-32768...32767	100
0x012C	300	R	I	Sensor fault runtime parameter Sensor signal over/under limits	-	-
0x012D	301	R	I	Sensor fault runtime parameter	-	-

				Measurement over/under range		
0x012E	302	R	I	Sensor fault runtime parameter Sensor Zero parameter too high	-	-
0x012F	303	R	I	Sensor fault runtime parameter Digital sensor communication error	-	-
0x0130	304	R	I	Sensor fault runtime parameter Sensor measurement runtime fault	-	-
0x0136	310	RW	H	Modbus state	WRITE 0xA55A = return defaults 0xA11A = reinit 0xA00A = leave safe mode READ 0 = Normal mode 1 = Safe mode	0

* – Is register readable and writable (RW) or only readable (R)

** – Register type: Holding (H), Input (I), or Input and Holding (IH)

*** – The new value is applied after a restart

**** – Only writable in test mode

Disposal

Gas sensors and gas detection equipment shall not be disposed of as general waste. At the end of life, the instrument, sensors, and any associated electronic components must be handled in accordance with all applicable local, national, and regional regulations governing electrical and electronic waste (e-waste), hazardous waste, and chemical waste.

Gas sensors may contain electrolytes, metals, or other materials that require controlled disposal. These components shall be removed, where applicable, and processed through approved recycling or hazardous-waste channels. Calibration gas cylinders and pressurized components must be returned to the supplier or disposed of through licensed gas or chemical waste handlers.

Where required by law or site policy, disposal shall be performed by certified waste contractors, and appropriate documentation shall be retained. Recycling is encouraged where permitted and safe. In case of uncertainty, the manufacturer or local regulatory authority should be consulted.

Disclaimer

This document is subject to change.

The latest and actual version is located on the Manufacturer's web page.

Warranty

This product is warranted to be free from defects in material and workmanship for a period of one year from the date of the original sale. During this warranty period, the Manufacturer will, at its option, either repair or replace a product that proves to be defective. This warranty is void if the product has been operated in conditions outside the ranges specified by the Manufacturer or damaged by customer error or negligence, or if there has been an unauthorized modification.

Manufacturer contacts

Evikon MCI OÜ

Teaduspargi 9, Tartu
50411 Estonia
info@evikon.eu
www.evikon.eu