DATASHEET

# E2638

Evikon

Distributed by AKRIBIS

IP65 | 4-20 mA 0-10 V | RS485 Modbus

# Solvent Vapours Detector-Transmitter E2638-VOC

## Features

- Accurate and stable measurement
- Easy to install robust enclosure
- Two analog outputs settable to 4-20 mA or 0-10 V
- RS485 Modbus RTU digital interface
- Relay option
- Attached or remote sensor
- LCD indicator option

## Specifications

| | |
|---|---|
| Detected gases | Toluene, xylene,ethanol etc |
| Default calibration | Toluene |
| Sensor type | Metal oxide semiconductor |
| Sampling method | Diffusion |
| Typical detection range | Up to 0...1000 ppm (toxic range)<br>0...100% LEL (flammable range) |
| Resolution | 1 ppm for toxic ranges<br>0,1 % LEL for flammable range |
| Response time T90 | < 120 s |
| Sensor lifetime | > 5 years |
| Maintenance interval | 12 months |
| Signal update | Every 1 second |
| Self-diagnostics | Full functionality check at start-up |
| Warm-up time | ≤ 1 min |
| Power supply | 12...36 VDC (default)<br>24 VAC or 230 VAC as options |
| Power consumption | < 2 VA |
| Digital interface | RS485, Modbus RTU protocol |
| Analog outputs | 2 × 4-20 mA / 0-10 V, user settable |
| Output scale width | Recommended: 20-100% of the range;<br>> 10 × resolution in any case |
| Enclosure | Grey ABS plastic, wall mount,<br>protection class IP65 |
| Dimensions | H90 × W145 × D55 mm (housing only)<br>H140 with cable glands |
| Operating environment | Industrial indoor and outdoor locations |
| Operating conditions | -40…+70 °C; <95% RH non-condensing;<br>0.9...1,1 atm<br>Explosion-safe areas<br>Normal ambient oxygen level<br>Avoid strong mechanical shock, vibrations or EMI;<br>Avoid exposure to corrosive gases or silicone containing products |

## Dimensions

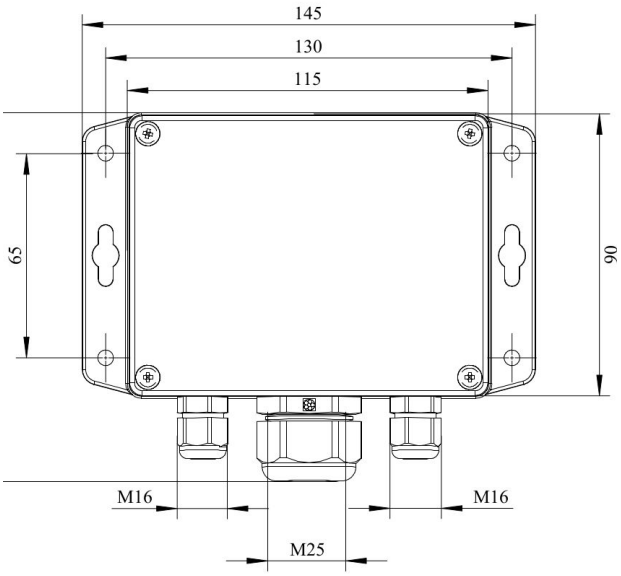


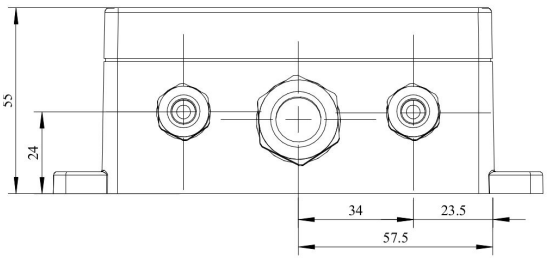


**Ask for other versions or custom designed products**

AKRIBIS · www.akribis.info · contacto@akribis.info

## Additional options

| | |
|---|---|
| Remote sensor probe | Protection IP65, shielded cable default cable length 3.0 m |
| Self-test button | Triggers both relays simultaneously; push-button switch |
| **Relay outputs** | |
| Output relays | 2 × SPST relays (closing contact), 250 VAC / 30 VDC, 5 A max |
| Default alarm set-points | LOW: set 100 , release 80 ppm<br>HIGH: set 300, release 240 ppm<br>(for the range 0...1000 ppm)<br>LOW: set 20 , release 16 %LEL<br>HIGH: set 50, release 40 %LEL<br>(for flammability range) |
| **Alarm signalling** | |
| Visual | Red and green LEDs |
| Acoustic | Buzzer 85 dB |
| **LCD indicator** | |
| Operating temperature | 0...+50 °C |
| Display dimensions | 72 × 36 mm |
| Number of digits | 3.5 7-segment |
| Character height | 14 mm |
| Other features | Backlight |
| Protection class | IP50 (both for built-in and remote LCD options) |

**NOTE!** Only second analog output (OUT2) is available for a version with LCD.
**NOTE!** LCD and LEDs can not be chosen simultaneously.

## Version with built-in LCD indicator

## Version with remote LCD indicator

## Remote probe

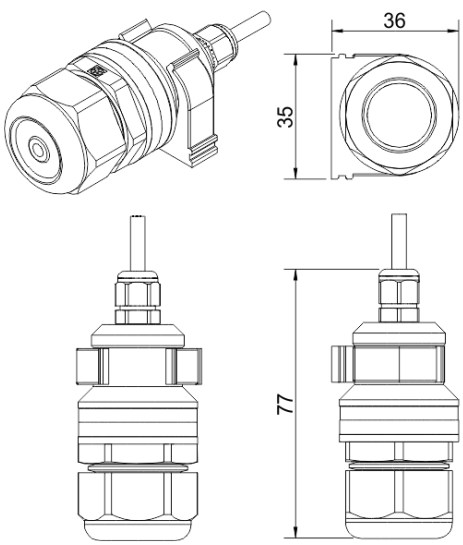


A

Wall mount remote probe with fixing clamp (default version)

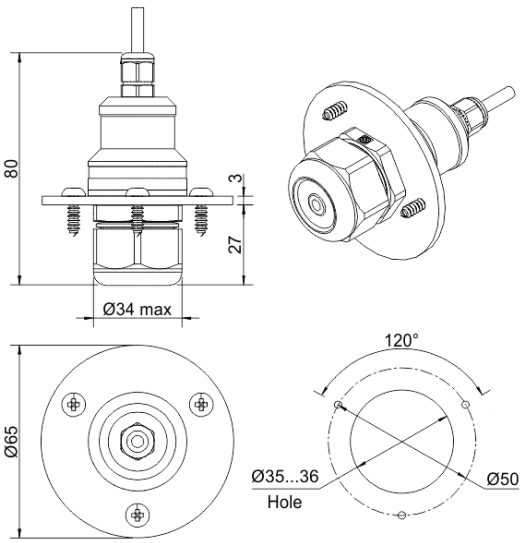


B

Remote probe with rubber flange and three self-tapping screws (on request)

AKRIBIS · www.akribis.info · contacto@akribis.info

## Connection diagrams

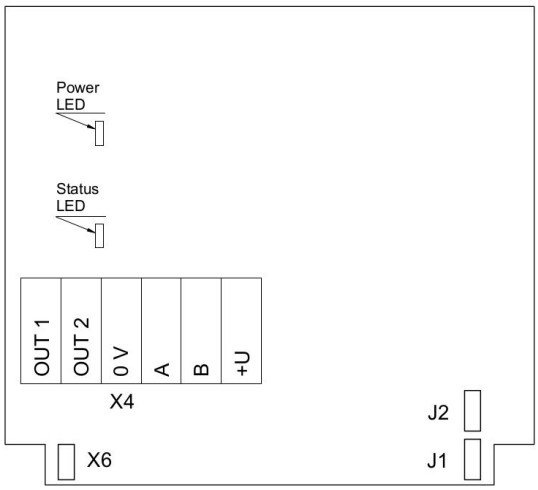

Version without PSU and relays

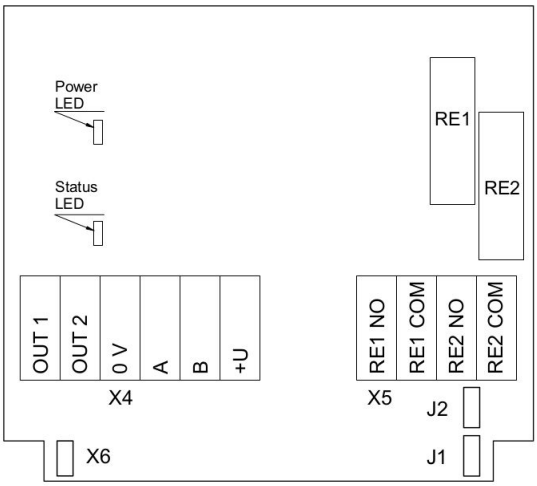

Version without PSU and with relays

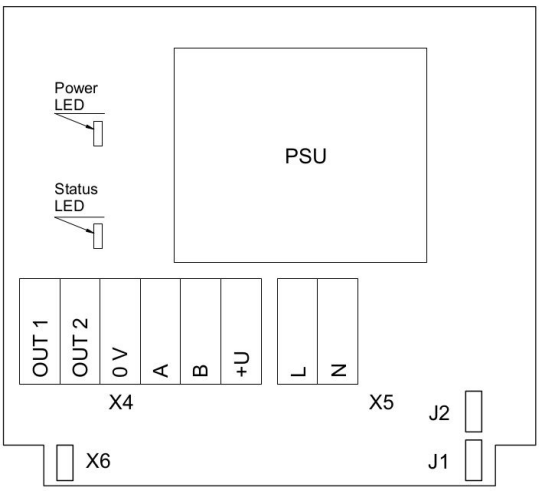

Version with PSU and without relays

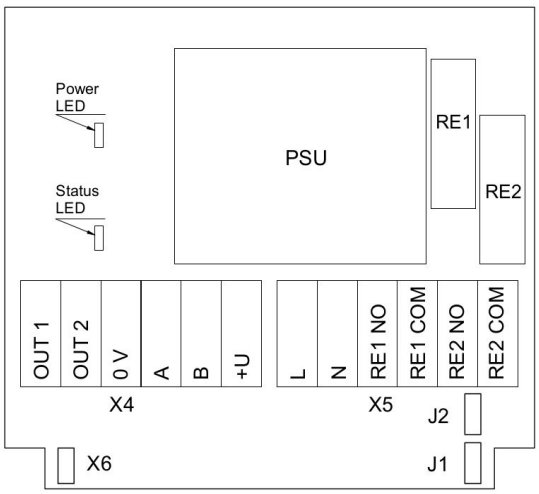

Version with PSU and relays

| | |
|---|---|
| **Jumpers** | |
| **J1** | OUT1 type (open: 4-20 mA; closed 0-10 V) |
| **J2** | OUT2 type (open: 4-20 mA; closed 0-10 V) |
| **X6** | Reset Modbus network parameters to default |
| **X4 terminals** | |
| **OUT1** | 4-20 mA / 0-10 V output |
| **OUT2** | 4-20 mA / 0-10 V output |
| **0V** | 0 V / 24 VAC Neutral (optional) |
| **A** | RS485 A / Data + |
| **B** | RS485 B / Data - |
| **+U** | +24 VDC / 24 VAC Phase (optional) |
| **X5 terminals (optional)** | |
| **L** | 90…265 VAC Phase |
| **N** | 90…265 VAC Neutral |
| **RE1 NO** | Relay 1, normally open terminal |
| **RE1 COM** | Relay 1, common terminal |
| **RE2 NO** | Relay 2, normally open terminal |
| **RE2 COM** | Relay 2, common terminal |

AKRIBIS · www.akribis.info · contacto@akribis.info