DATASHEET

E2638

Evikon

Distributed by AKRIBIS

IP65 | 4-20 mA 0-10 V | RS485 Modbus

Ammonia Detector-Transmitter
E2638-NH3-E

Features

- Accurate and stable measurement
- Easy to install robust enclosure
- Two analog outputs settable to 4-20 mA or 0-10 V
- RS485 Modbus RTU digital interface
- Relay option
- Attached or remote sensor
- LCD indicator option

Specifications

Calibration	Ammonia NH_3			
Sensor type	Electrochemical			
Sampling method	Diffusion			
Detection ranges, ppm	0...100	0...300	0...1000	0...5 000
Maximum overload, ppm	200	500	1500	10 000
Response time T90, s	< 75	< 75	< 75	< 120
Resolution, ppm	1			
Signal update	Every 1 second			
Sensor lifetime	> 2 years			
Maintenance interval	6 months			
Self-diagnostics	Full functionality check at start-up			
Warm-up time	≤ 1 min			
Power supply	12...36 VDC (default) 24 VAC or 230 VAC as options			
Power consumption	< 2 VA			
Digital interface	RS485, Modbus RTU protocol			
Analog outputs	2 × 4-20 mA / 0-10 V, user settable			
Output scale width	Recommended: 20-100% of the range; > 10 × resolution in any case			
Enclosure	Grey ABS plastic, wall mount, protection class IP65			
Dimensions	H90 × W145 × D55 mm (housing only) H140 with cable glands			
Operating environment	Industrial indoor and outdoor locations			
Operating conditions	-40...+50°C, -30...+50°C (for 0…5 000 ppm), 15...90 %RH non-condensing; 0,9...1,1 atm; Explosion-safe areas; Non-aggressive atmosphere			

NOTE! The device is not suitable for areas with constantly high ammonia concentration;

NOTE! We offer technical solutions for extreme humidity, please ask for more information.

Dimensions

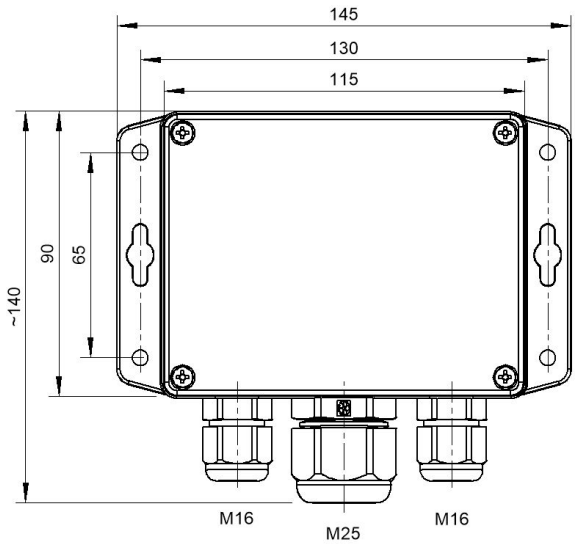

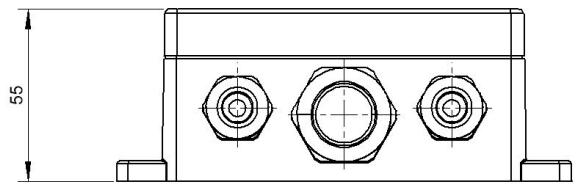

Ask for other versions or custom designed products

AKRIBIS · www.akribis.info · contacto@akribis.info

Additional options

Remote sensor probe	Protection IP65, shielded cable default cable length 3.0 m
Self-test button	Triggers both relays simultaneously; push-button switch
Relay outputs	
Output relays	2 × SPST relays (closing contact), 250 VAC / 30 VDC, 5 A max
Default alarm set-points	For 0...100 ppm range: RE1 (LOW): set 25; release 20 ppm RE2 (HIGH): set 35; release 28 ppm For other ranges: defined by user within 5-95% of the detection range
Alarm signalling	
Visual	Red and green LEDs
Acoustic	Buzzer 85 dB
LCD indicator	
Operating temperature	0...+50 °C
Display dimensions	72 × 36 mm
Number of digits	3.5 digit 7-segment
Character height	14 mm
Other features	Backlight
Protection class	IP50 (both for built-in and remote LCD options)

NOTE! Only second analog output (OUT2) is available for a version with LCD.
NOTE! LCD and LEDs can not be chosen simultaneously.

Version with built-in LCD indicator

Version with remote LCD indicator

Remote probe

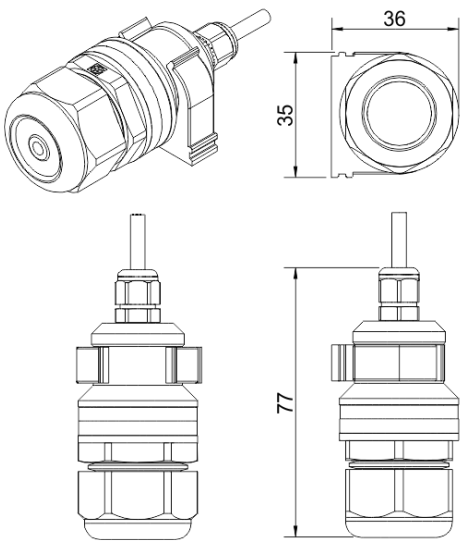

A

Wall mount remote probe with fixing clamp (default version)

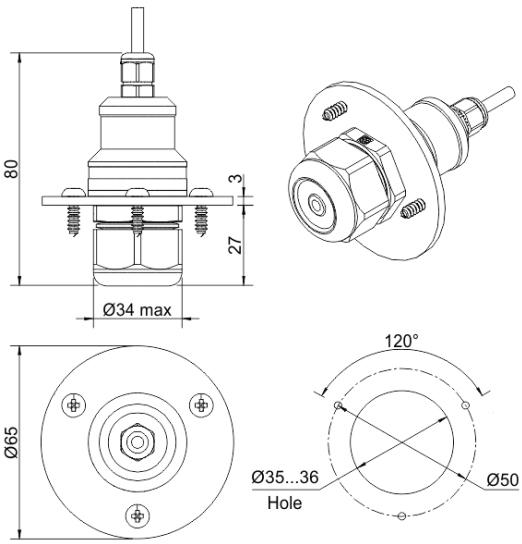

B

Remote probe with rubber flange and three self-tapping screws (on request)

AKRIBIS · www.akribis.info · contacto@akribis.info

Connection diagrams

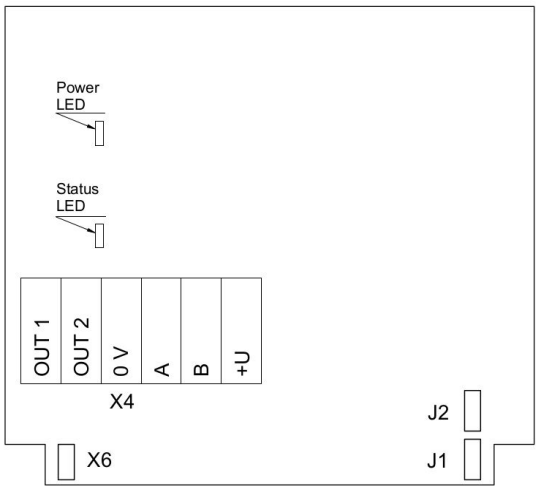

Version without PSU and relays

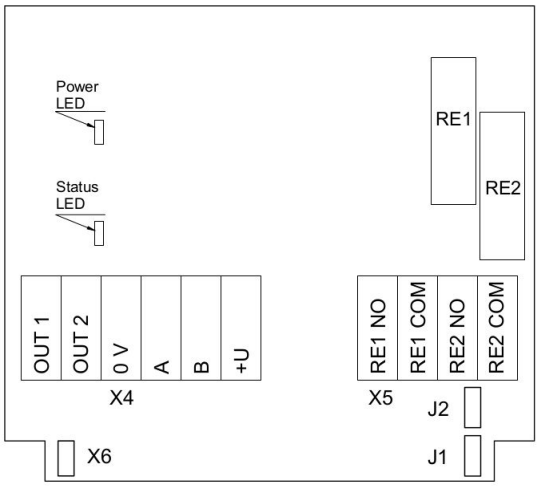

Version without PSU and with relays

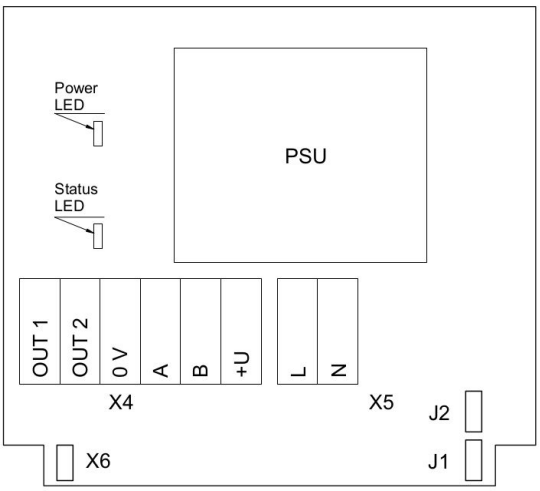

Version with PSU and without relays

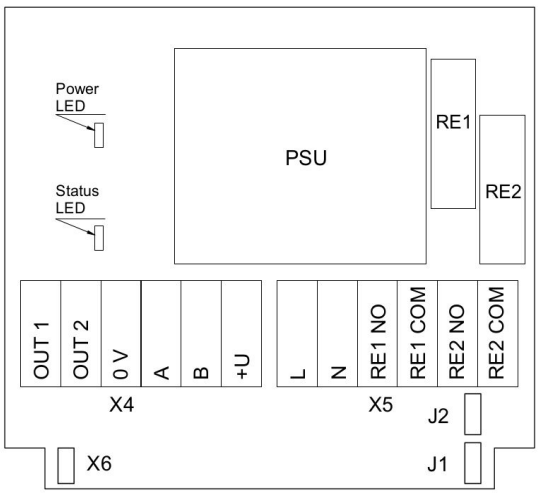

Version with PSU and relays

Jumpers	
J1	OUT1 type (open: 4-20 mA; closed 0-10 V)
J2	OUT2 type (open: 4-20 mA; closed 0-10 V)
X6	Reset Modbus network parameters to default
X4 terminals	
OUT1	4-20 mA / 0-10 V output
OUT2	4-20 mA / 0-10 V output
0V	0 V / 24 VAC Neutral (optional)
A	RS485 A / Data +
B	RS485 B / Data -
+U	+24 VDC / 24 VAC Phase (optional)
X5 terminals (optional)	
L	90…265 VAC Phase
N	90…265 VAC Neutral
RE1 NO	Relay 1, normally open terminal
RE1 COM	Relay 1, common terminal
RE2 NO	Relay 2, normally open terminal
RE2 COM	Relay 2, common terminal

AKRIBIS · www.akribis.info · contacto@akribis.info