DATASHEET

E2638

Evikon

Distributed by AKRIBIS

IP65 | 4-20 mA 0-10 V | RS485 Modbus

Ozone Detector-Transmitter
E2638-O3

Features

- Accurate and stable measurement
- Easy to install robust enclosure
- Two analog outputs settable to 4-20 mA or 0-10 V
- RS485 Modbus RTU digital interface
- Relay option
- Attached or remote sensor
- LCD indicator option

Specifications

Calibration	Ozone O_3	
Sensor type	Electrochemical	
Sampling method	Diffusion	
Detection ranges	0...5 ppm	0…1 ppm
Maximum overload	50 ppm	5 ppm
Resolution	0.01 ppm	0.01 ppm
Response time	< 60 s (T80)	≤ 90 s (T90)
Sensor lifetime	> 2 years	> 18 months
Maintenance interval	6 months	12 months
Operating temperature	-40...+50 °C	-20...+40 °C
Signal update	Every 1 second	
Self-diagnostics	Full functionality check at start-up	
Warm-up time	≤ 1 min	
Power supply	12...36 VDC (default) 24 VAC or 230 VAC as options	
Power consumption	< 2 VA	
Digital interface	RS485, Modbus RTU protocol	
Analog outputs	2 × 4-20 mA / 0-10 V, user settable	
Output scale width	Recommended: 20-100% of the range; > 10 × resolution in any case	
Enclosure	Grey ABS plastic, wall mount, protection class IP65	
Dimensions	H90 × W145 × D50 mm (housing only) H140 with cable glands	
Operating environment	Industrial indoor and outdoor locations	
Operating conditions	(operating temperature is specified above) 15...90% RH non condensing; 0.9...1,1 atm Explosion-safe areas Non-aggressive atmosphere **NOTE!** We offer technical solutions for extreme humidity, please ask for more information.	

Dimensions

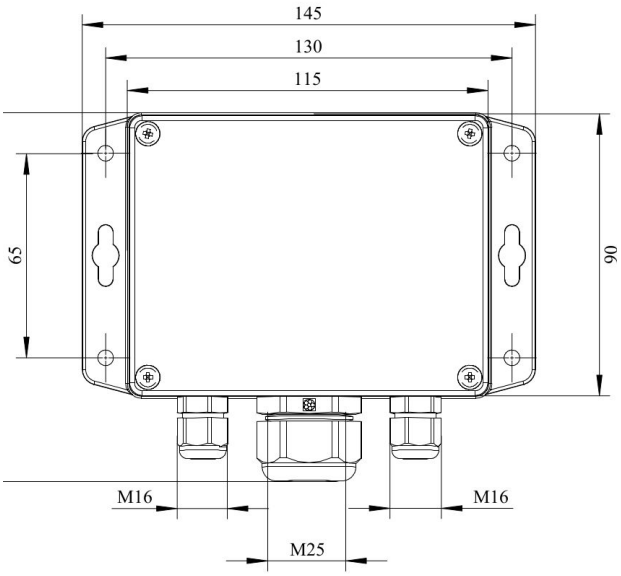

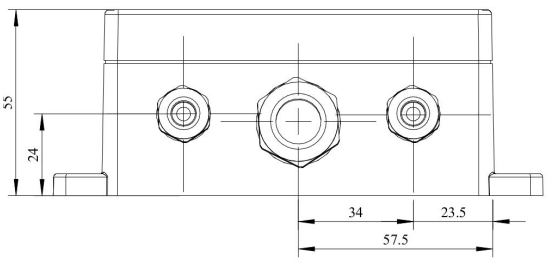

Ask for other versions or custom designed products

AKRIBIS · www.akribis.info · contacto@akribis.info

Additional options

Remote sensor probe	Protection IP65, shielded cable default cable length 3.0 m
Self-test button	Triggers both relays simultaneously; push-button switch
Relay outputs	
Output relays	2 × SPST relays (closing contact), 250 VAC / 30 VDC, 5 A max
Default alarm set-points	RE1 (LOW): set 0.3 ppm, release 0.24 ppm RE2 (HIGH):set 1 ppm, release 0.8 ppm
Alarm signalling	
Visual	Red and green LEDs
Acoustic	Buzzer 85 dB
LCD indicator	
Operating temperature	0...+50 °C
Display dimensions	72 × 36 mm
Number of digits	3.5 7-segment
Character height	14 mm
Other features	Backlight
Protection class	IP50 (both for built-in and remote LCD options)

NOTE! Only second analog output (OUT2) is available for a version with LCD.
NOTE! LCD and LEDs can not be chosen simultaneously.

Version with built-in LCD indicator

Version with remote LCD indicator

Remote probe

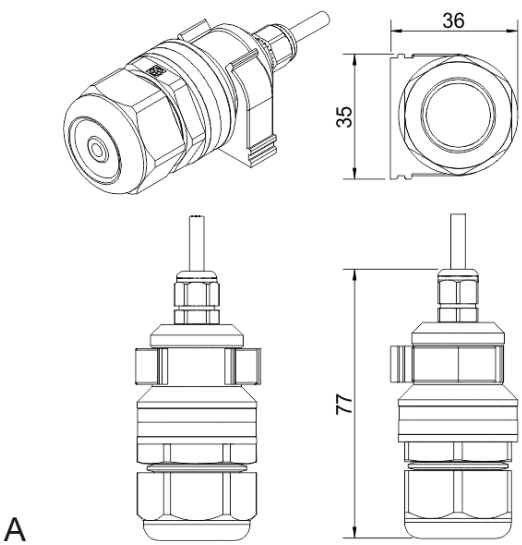

Wall mount remote probe with fixing clamp (default version)

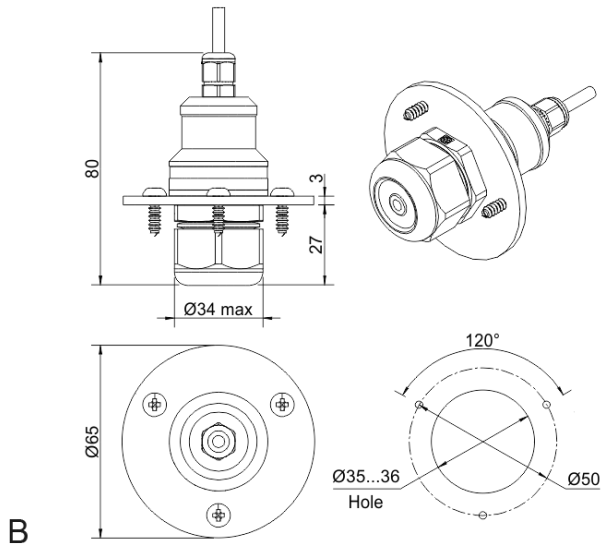

Remote probe with rubber flange and three self-tapping screws (on request)

AKRIBIS · www.akribis.info · contacto@akribis.info

Connection diagrams

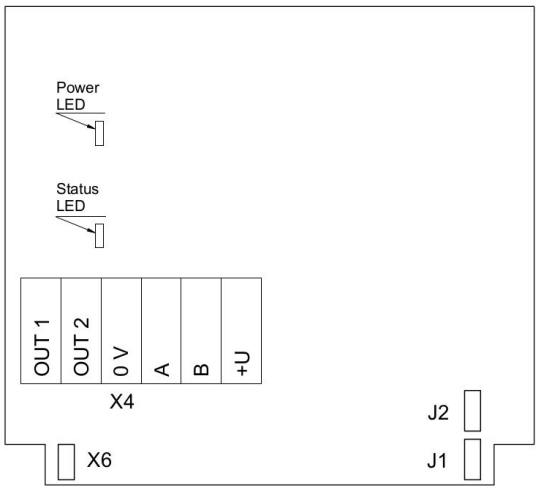

Version without PSU and relays

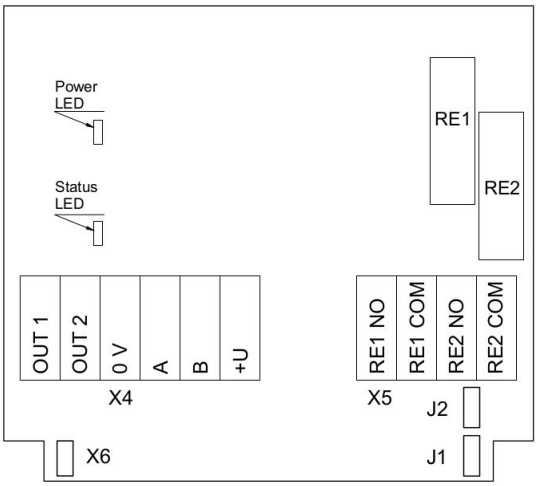

Version without PSU and with relays

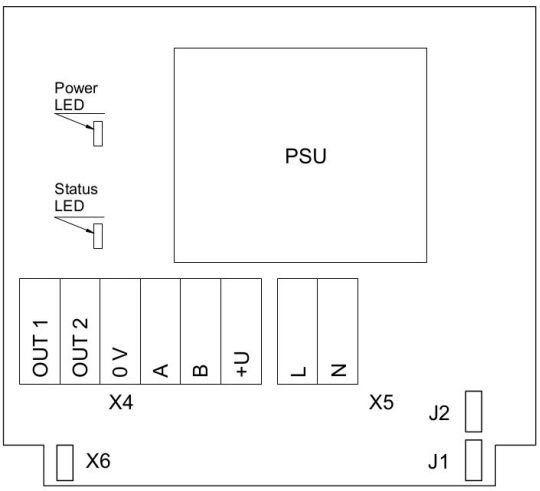

Version with PSU and without relays

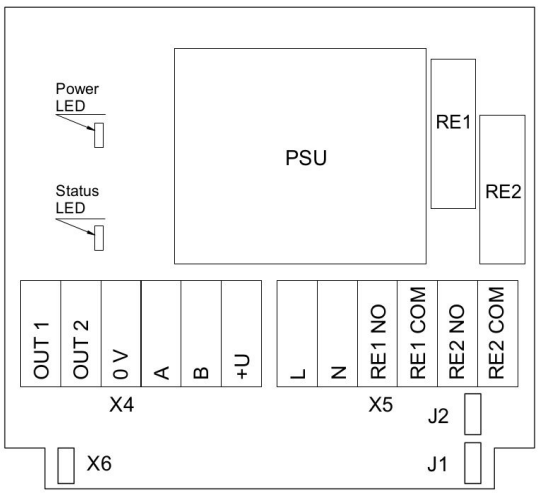

Version with PSU and relays

Jumpers	
J1	OUT1 type (open: 4-20 mA; closed 0-10 V)
J2	OUT2 type (open: 4-20 mA; closed 0-10 V)
X6	Reset Modbus network parameters to default
X4 terminals	
OUT1	4-20 mA / 0-10 V output
OUT2	4-20 mA / 0-10 V output
0V	0 V / 24 VAC Neutral (optional)
A	RS485 A / Data +
B	RS485 B / Data -
+U	+24 VDC / 24 VAC Phase (optional)
X5 terminals (optional)	
L	90…265 VAC Phase
N	90…265 VAC Neutral
RE1 NO	Relay 1, normally open terminal
RE1 COM	Relay 1, common terminal
RE2 NO	Relay 2, normally open terminal
RE2 COM	Relay 2, common terminal

AKRIBIS · www.akribis.info · contacto@akribis.info