USER GUIDE

E2632

Evikon

Distributed by AKRIBIS

Two Channel Gas Detector

E2632

User Manual

AKRIBIS · www.akribis.info · contacto@akribis.info

Table of contents

Gases **3**

Specifications **4**

Product description **5**

Safety requirements **5**

Operating conditions **5**

Installation guidelines **6**

Mounting dimensions **7**

Connections **8**

Operation **9**

Sensor probe handling **10**

The electrochemical gas sensor replacement procedures **10**

Maintenance **11**

Calibration **11**

Delivery set **11**

Order code for E2632 options 11

Warranty **12**

Manufacturer contacts **12**

Gases

Gas	Detection range	Sensor type	Sensor lifetime	Response time T90	Calibration interval
Carbon monoxide	0-200 ppm 0-1000 ppm	Electrochemical	>10 years	< 30 sec	12 months
Hydrogen sulfide	0-50 ppm	Electrochemical	>2 years	< 25 sec	6 months
Nitrogen dioxide	0-10 ppm	Electrochemical	>2 years	< 60 sec	6 months
Chlorine	0-5 ppm	Electrochemical	>2 years	< 120 sec	6 months
Formaldehyde (CH2O)	0-5 ppm	Electrochemical	>2 years	< 120 sec	6 months
Sulfur dioxide (SO2)	0-10 ppm 0-100 ppm	Electrochemical	>2 years	< 30 sec	6 months
Ammonia (NH3)	0-100 ppm 0-500 ppm	Electrochemical	>2 years	< 50 sec	6 months
Methane (CH4)	0-100% LEL	Metal-oxide semiconductor	>5 years	≈ 60 sec	12 months
Butane/Propane (LPG)	0-100% LEL	Metal-oxide semiconductor	>5 years	≈ 60 sec	12 months
Hydrogen (H2)	0-100% LEL	Metal-oxide semiconductor	>5 years	≈ 60 sec	12 months
Solvent vapors (VOC)	0-500 ppm 0-100% LEL	Metal-oxide semiconductor	>5 years	< 120 sec	12 months
Refrigerants (HFC)	0-500 ppm	Metal-oxide semiconductor	>5 years	< 120 sec	12 months

NOTE! The instrument can support each combination of the gases above.

NOTE! Ask about combinations for combustible gases.

Specifications

Sensor type	Depends on detected gases Available are: Metal oxide sensors, Electrochemical sensors
Sampling method	Diffusion
Signal update	Every 1 second
Power supply	24 VDC/AC ±20% (default) or 230 VAC (optional)
Power consumption	< 2 VA
Digital interface	UART
Relay outputs	2 relays with switch-over contact per sensor, 2 × SPDT, max 5 A, 30 VDC / 250 VAC
Alarm signaling	Blinking LEDs, buzzers 85 dB
LEDs	Green/red (operation/fault), red (gas alarm)
Enclosure	Grey ABS, wall mount, protection class IP65
Dimensions	H123 × W201 × D55 mm
Output cable	Max Ø8 mm
CE marking	According to 2014/30/EU and 2014/35/EU, EN 50491-4-1:2012 EN 61000-6-3:2020, EN 61326-1:2013(EMC, emissions) EN 61000-6-1:2019, EN 61000-6-2:2019(EMC, Immunity) EN 60079-29-1:2016, EN 60079-29-2:2015 and EN 60079-29-3:2014
Operating conditions	15...95 %RH, Atmospheric pressure ±10% Non-Atex rated areas The temperature depends on the sensor.

Product description

E2632 series gas detectors are compact and easy-to-use instruments. The devices utilize novel fully calibrated and temperature compensated gas sensors with excellent repeatability, stability, and long lifetime.

Two relays RE1 and RE2 with switching contacts can be used to control alarm sirens, ventilation fans, shut-off valves, or other actuators for each sensor. The devices are equipped with a visual and acoustic alarm for each sensor. 24 VAC or 230 VAC power supply options are available.

The version of your detector is marked on the package.

Safety requirements

Misuse will impair the protection of the product. Always adhere to the safety provisions applicable in the country of use.

Do not perform any maintenance operation with the power on. Do not let water or foreign objects inside the device.

Removal of the PCB from the enclosure voids the warranty. Do not touch the electronic components directly, as they are sensitive to static electricity.

Connection diagrams can be found in the connections section. The device might not perform correctly or be damaged if the wrong power supply is connected.

External circuits connected to the equipment should have sufficient insulation rating according to the environmental conditions and equipment power.

A disconnecting device that is marked as such and easily accessible should be included in the installation of this product.

Operating conditions

The device should be used both in a non-hazardous area and in a basic electromagnetic environment, where the latter is defined in EN 61326-1. Avoid strong mechanical shock and vibrations. Avoid corrosive atmosphere and areas highly contaminated with dust, oil mist, etc. Keep the instrument away from direct sunlight. A sudden temperature or humidity change might affect the sensitivity of the sensor.

When stored without powering in normal air for a long period, or in an environment contaminated with organic vapors or volatile oils, the sensor may show a reversible drift in resistance according to the environment.

Installation guidelines

There are no precise rules or standards to follow when installing gas detectors. The following points must be taken into account:

- Application (air quality control or leakage detection.)
- Properties of the space under investigation (room geometry, direction, and velocity of airflows, etc.),
- Detected gas (relative density to air, temperature, whether the gas is flammable, or toxic, or oxygen displacing),
- The device should be accessible for maintenance and repair.

The aforementioned conditions above will affect the coverage area of the device. However, the coverage area for a detector is usually between 2.5 to 5 meters radius.

For early leakage detection install the sensor as close as possible to the potential leakage sources (flanges, valves, pressure reducers, pumps, etc.), taking into consideration other points listed above.

For general area monitoring without definite leakage sources, the detector should be distributed evenly in the room.

Do not locate the detector close to ventilation openings and strong air currents. Avoid the areas without air circulation (corners, niches) as well.

For personal safety control, the detectors are installed in the breathing zone (at the height of the head of people or animals). The recommended sensor position is vertical, pointing downwards.

Mounting dimensions

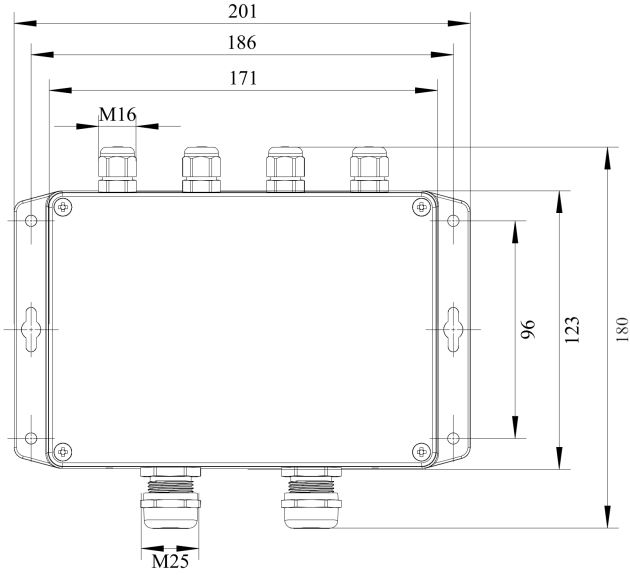

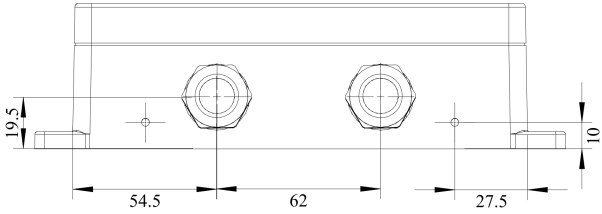

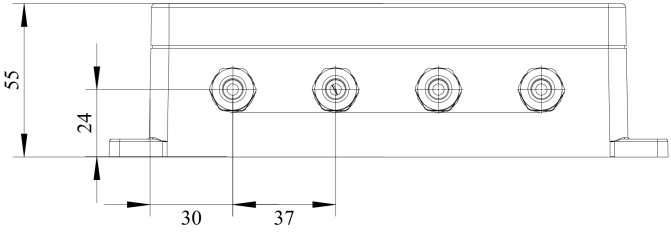

Connections

1. Unscrew four lid screws and detach the lid from the device;

2. Attach the device to the wall using provided screws through the side mounting holes or key slots (This step may be done before step 1, consider your convenience).

3. Use two M16 cable glands to let in the cables of the power supply and of the external devices to each sensor.

Connect the power terminals N and L to the 24 V AC/DC source if you are using detector version -24 or to 230 V AC mains if you are using detector version -230 (see diagram below).

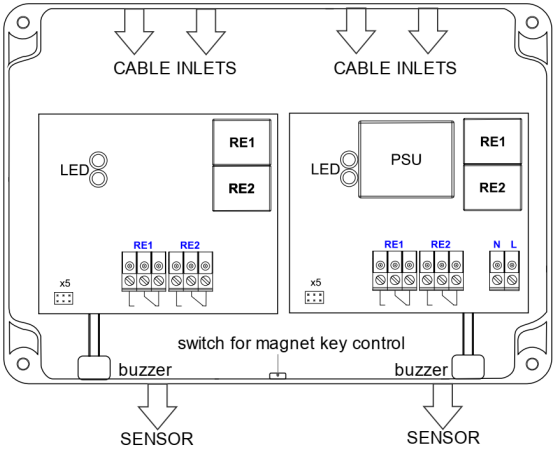

Terminals	
RE1 NO	Relay 1, normally open terminal
RE1 COM	Relay 1, common terminal
RE1 NC	Relay 1, normally closed terminal
RE2 NO	Relay 2, normally open terminal
RE2 COM	Relay 2, common terminal
RE2 NC	Relay 2, normally closed terminal
L	90…265 VAC Phase (optional 24 VAC / VDC)
N	90…265 VAC Neutral (optional 24 VAC / VDC)

The terminals on the E2632 series devices are suitable for a wide range of wires with cross-section 0,2...1,5 mm^2. We recommend to strip the wire end by 5...6 mm and use the wire end sleeves. To connect the wire, loosen the screw, insert the wire end into the terminal hole and tighten the screw.

To use relay outputs, connect the chosen actuators to the relay terminals RE1 and/or RE2 for each sensor.

NOTE! Actuator short-circuits shall be avoided, to protect the instrument relays, use external fuses or safety switches.

3. Place the lid back and fix it with the screws. Make certain that the cable glands are properly tightened to ensure the conformity to IP65 protection class.

4. Turn on the power. It may take up to five minutes after switching on for the sensor to stabilize.

For stable operating, it is recommended to keep the detector powered constantly, except for periods of maintenance and calibration, replacement, etc.

Operation

During the first ca. 60 seconds after powering on E2632 performs a warming-up and self-diagnostic routine, indicated by the flashing of each LED. Each sensor has two LEDs. The upper dual-color LED remains continuously green in normal operation and blinks red in case of device or sensor fault. The warm-up time depends on the sensor types, unpowered period, and atmosphere.

During the first 30 seconds after powering on you may select the automatic or manual mode of alarm release. Touch the device with the magnet key on the bottom of the device.

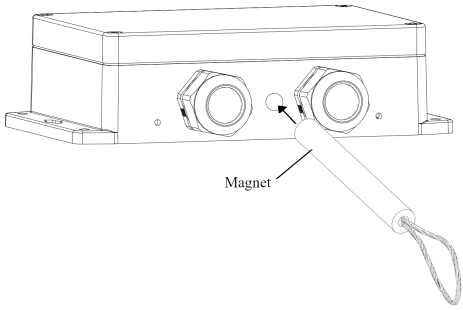

A short touch (< 2 s) enables the automatic mode, a touch of 2...10 s — manual mode. The activation of the automatic mode is followed by a single LED blinking and acoustic signal. If manual mode is activated, the double acoustic and light signal follows.

If the gas concentration for each sensor exceeds the LOW alarm setpoint, the bottom red LED of that sensor starts flashing at a rate of 1 Hz, and the relay RE1 switches over. The first alarm stops automatically if the gas concentration drops below 80% of the LOW alarm setpoint.

If the gas level exceeds the HIGH alarm setpoint, the bottom red LED of that sensor starts flashing and the buzzer starts beeping at a rate of 2 Hz, and also the relay RE2 switches over. Depending on the selected release mode, the HIGH alarm stops automatically or can be stopped with a short touch of the magnet key, if the gas level has dropped below 80% of the LOW alarm setpoint. Upon contact, the key should activate the reed switch located left of the sensor inside the device.

Apart from the warming-up period, a 2....10 s touch causes the device to reset and perform the self-diagnostic routine for testing purposes. To check the visual and acoustic alarm, touch the device with the magnet key for more than 10 s. This will launch blinking and beeping (stops as soon as the key is withdrawn).

Sensor probe handling

The sensor probes of all types are equipped with a hydrophobic microporous PTFE filter to protect the sensor from dust, dirt, and water drops. The filter may be replaced if it gets strongly contaminated. To replace the PTFE filter, unscrew the M25 nut and remove the old filter. Place a new filter into the nut and tighten it again.

NOTE! Never stab or press the filter near its center where the sensor is located since this may damage the sensor. Do not remove the filter as it may cause the device to show incorrect values.

The recommended orientation of the sensor probes is vertical with the sensor tips pointing downwards. This prevents the possible accumulation of condensed water on the sensor protection filter.

The electrochemical gas sensor replacement procedures

1. Un-power detector;
2. Unscrew sensor head cap;
3. Carefully take out the sensor cell;
4. Disconnect the first wire from the old sensor and connect to the same pin on the new sensor;
5. Disconnect the second wire from the old sensor and connect to the second pin on the new sensor;
6. Insert the new sensor into the sensor head and screw back the sensor head cap.

Maintenance

Do not perform any maintenance operation with the power on.

Clean the device with a soft damp cloth. Do not use any abrasive cleaning agents. Do not immerse the device in water or any cleaning media.

Calibration

E2632 detectors have been calibrated by the Manufacturer with standard gas mixtures before delivery. Provided that the sensor is used under moderate conditions, field recalibration is recommended every few months. The calibration intervals are stated in the gases table. Please contact your dealer for more information.

Delivery set

- Dual gas Detector E2632
- Magnet key
- Mounting accessories:
    - 4 screws and 4 plastic dowel plugs

Order code for E2632 options

E2632 options	Order code
Integrated 90...265 V mains power supply module	E2632-(first gas)-(second gas)-230
Integrated 24 VAC power supply module	E2632-(first gas)-(second gas)-24VAC

Warranty

This product is warranted to be free from defects in material and workmanship for a period of one year from the date of the original sale. During this warranty period, the Manufacturer will, at its option, either repair or replace a product that proves to be defective. This warranty is void if the product has been operated in conditions outside ranges specified by the Manufacturer or damaged by customer error or negligence or if there has been an unauthorized modification.

Manufacturer contacts

Evikon MCI OÜ

Teaduspargi 9, Tartu
50411 Estonia
info@evikon.eu
www.evikon.eu