DATASHEET

E2630

Evikon

Distributed by AKRIBIS

Solvent Vapor Detector
E2630-VOC

Features

- Toluene, Xylene, Ethanol etc
- Accurate and stable measurement
- Wall-mount IP65 protected housing
- Visual and acoustic alarms
- Two output relays for alarm / ventilation control

Specifications

Detected vapors	Acetone, Benzene, Ethanol, Ethyl Acetate, Toluene, Xylenes etc
Default calibration	Toluene
Sensor type	Metal oxide semiconductor
Sampling method	Diffusion
Typical detection range	0...100% LEL 0...100 to 1000 ppm
Resolution	0,1 %LEL 1 ppm
Response time	< 120 seconds
Signal update	Every 1 second
Sensor lifetime	> 5 years
Maintenance interval	12 months
Self-diagnostics	Full functionality check at start-up, testing by magnetic switch
Warm-up time	≤ 1 min
Power supply	24 VDC/AC ±20% (default)
	or 230 VAC (optional)
Power consumption	< 2 VA
Digital interface	UART
Output relays	2 relays with switch-over contact (SPDT), 250 VAC / 30 VDC, 5 A max
Default alarm set-points	Release - LOW - HIGH 7 - 10 - 25 %LEL
	70 - 100 - 300 ppm
Alarms	Blinking LED, buzzer 85 dB
Enclosure	Grey ABS plastic, wall mount, protection class IP65
Dimensions	H140 × W145 × D55 mm
Operating conditions	-40...+70 °C <95 %RH; Pressure 0,9...1,1 atm; Non-atex rated spaces; Normal ambient oxygen level;
	Avoid strong mechanical shock, vibrations or EMI; Avoid exposure to corrosive gases or silicone containing products.

Ask for other versions or custom designed products

Dimensions

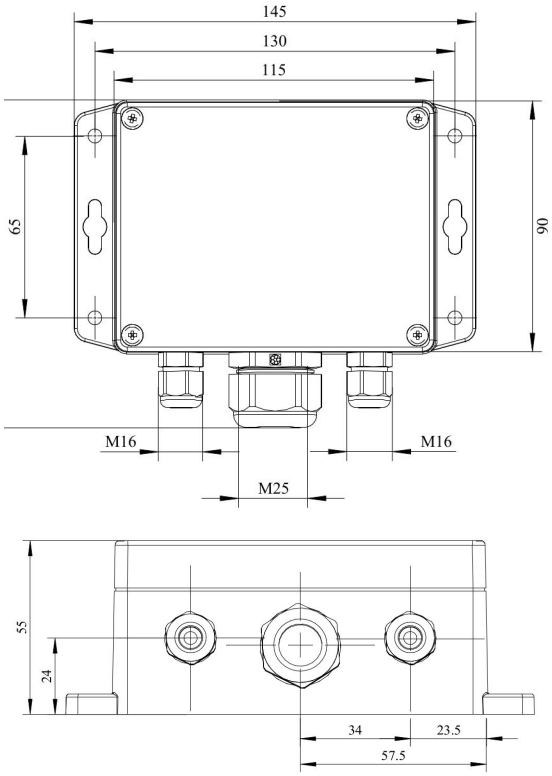

Magnet key

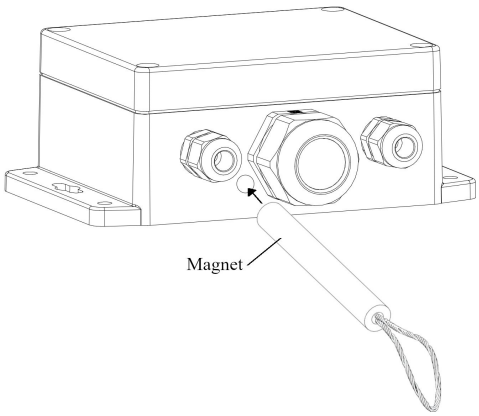

AKRIBIS · www.akribis.info · contacto@akribis.info

Connection diagram

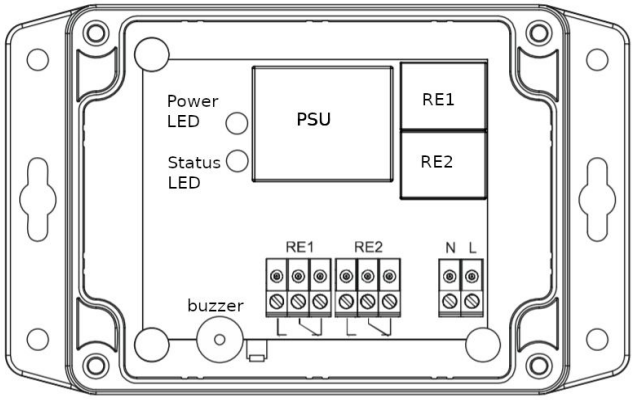

Terminals

RE1 NO	Relay 1, normally open terminal
RE1 COM	Relay 1, common terminal
RE1 NC	Relay 1, normally closed terminal
RE2 NO	Relay 2, normally open terminal
RE2 COM	Relay 2, common terminal
RE2 NC	Relay 2, normally closed terminal
L	90…265 VAC Phase (optional 24 VAC / VDC)
N	90…265 VAC Neutral (optional 24 VAC / VDC)