USER GUIDE

E2618

Evikon

Distributed by AKRIBIS

PluraSens®

Carbon Dioxide Transmitter

E2618-CO2

User Manual

Evikon

AKRIBIS · www.akribis.info · contacto@akribis.info

Table of contents

Carbon Dioxide **3**

Specifications **4**

Product description **6**

Safety requirements **6**

Operating conditions **6**

Installation guidelines **7**
- Wall mount version 7
- Duct mount version 7

Mounting dimensions **8**

Mounting dimensions (50KN sensor) **9**

Sensor probe handling **10**

Electrical connections **12**
- Correct and incorrect cabling for 24 VAC 13

Operation **14**

Maintenance **14**

Calibration **14**

Delivery set **15**
- Order code for E2618-CO2 options 15

Configuring **16**

Return to default settings **16**

Modbus RTU Communication **17**
- RS485 communication interface 17
- Communication parameters 17

Modbus holding registers **17**

Warranty **21**

Manufacturer contacts **21**

Carbon Dioxide

Carbon dioxide is a colorless, odorless, non-toxic, and non-flammable gas that is present in the Earth's atmosphere at a low concentration.

Chemical formula		CO_2
Molar weight		44
Relative gas density (to air)		1.52
Conversion		1 ppm = 1.80 mg/m^3
Boiling point		Sublimes
Flammability		Nonflammable
Odor		Odorless
Hazards		Dust of various metals (Mg, Zr, Ti, Al, Cr, Mn)is ignitable and explosive when suspended in carbon dioxide. In concentrations up to 1% (10 000 ppm), it will make some people feel drowsy and give the lungs a stuffy feeling. Concentrations of 7% to 10% (70 000 to 100 000 ppm) may cause suffocation, even in the presence of sufficient oxygen, manifesting as dizziness, headache, visual and hearing dysfunction, and unconsciousness within a few minutes to an hour.
Exposure limits (Directive 2006/15/EC)	TWA	9000 mg/m^3 /5000 ppm
	STEL	Not specified

Conversion of ppm to mg/m^3 is calculated for 25°C and 1 atm.

Specifications

Sensor type	Photoacoustic		Dual beam NDIR (optional)
Sampling method	Diffusion		
Ordering code	10K	40K	50KN
Detection range	0...10 000 ppm	0...40 000 ppm	0...5% vol.
Resolution / digital unit	1 ppm	10 ppm	0.01% vol.
Response time	T60 ≤ 60s		T50 ≤ 20 s; T90 ≤ 60 s
Sensor lifetime	Ca. 10 years		Ca. 5 years
Calibration interval	No field recalibration if ABC algorithm is enabled		12 months
Signal update	Every 5 seconds		Every 1 second
Sensor type	Photoacoustic		Dual beam NDIR (optional)
Power supply	12...36 VDC (default) 24 VAC as option		
Power consumption	< 2 VA		
Analog outputs	2 × 4-20 mA / 0-10 V, user settable		
Outputs assignment	OUT1: gas; OUT2: gas		
Output scale width	> 10 × resolution, Recommended: 20-100% of the detection range		
Digital interface	RS485, Modbus RTU protocol; No galvanic isolation		
Load resistance	R_L < (Us - 2 V) / 22 mA for 4-20 mA R_L > 250 kOhm for 0-10 V mode		
Cable connections	Screwless spring-loaded terminals		
Enclosure	Grey ABS, wall or duct mount, protection class IP65		
Dimensions	H82 × W80 × D55 mm		
Operating conditions	-40 to +60 °C, 0...100% RH Explosion safe areas; pressure 0,9...1,1 atm; Non-aggressive atmosphere without condensation		

CE marking	According to 2014/30/EU and 2014/35/EU, EN 50491-4-1:2012 EN 61000-6-3:2020, EN 61326-1:2013(EMC, emissions) EN 61000-6-1:2019, EN 61000-6-2:2019(EMC, Immunity) EN 60079-29-1:2016, EN 60079-29-2:2015 and EN 60079-29-3:2014
Other options	
Remote probe	Protection IP65, default cable length 3.0 m; max height 80 mm, max diameter 65 mm

Product description

E2618 series transmitters belong to the PluraSens® family of multifunctional measurement instruments. The instruments utilize gas sensors of various types with excellent repeatability, stability, and long lifetime.

E2618 series provide two independent analog outputs OUT1 and OUT2, user-selectable to 4-20 mA or 0-10 V, proportional to the chosen scale for gas concentration. RS485 Modbus RTU digital communication interface allows easy instrument configuration and integration into various automation systems.

Remote probe and duct mount versions are available.

The version of your transmitter is marked on the package. If the ⚠️ symbol is marked on the product, consult the documentation for further information.

Safety requirements

Misuse will impair the protection of the product. Always adhere to the safety provisions applicable in the country of use.

Do not perform any maintenance operation with the power on. Do not let water or foreign objects inside the device.

Removal of the PCB from the enclosure voids the warranty. Do not touch the electronic components directly, as they are sensitive to static electricity.

Connection diagrams can be found in the electrical connections section. The device might not perform correctly or be damaged if the wrong power supply is connected.

External circuits connected to the equipment should have sufficient insulation rating according to the environmental conditions and equipment power.

A disconnecting device that is marked as such and easily accessible should be included in the installation of this product.

Operating conditions

The device should be used both in a non-hazardous area and in a basic electromagnetic environment, where the latter is defined in EN 61326-1. Avoid strong mechanical shock and vibrations. Avoid corrosive atmosphere and areas highly contaminated with dust, oil mist, etc. Keep the instrument away from direct sunlight. A sudden temperature or humidity change might affect the sensitivity of the sensor.

Installation guidelines

Before proceeding with the installation it is mandatory to read the Safety requirements section and make sure to comply with all listed instructions. Installation standards EN 60079-29-2 and EN 45544-4 are also recommended for further instructions and related information about the installation. During the installation of the transmitter the following points must be considered:

- Application (air quality control or leakage detection.)
- Properties of the space under investigation (room geometry, direction, and velocity of airflows, etc.),
- Since CO_2 is heavier than air, it is recommended to locate the sensor not higher than the potential leakage. For air quality control, place the sensor in the breathing zone.
- The device should be accessible for maintenance and repair.

The aforementioned conditions above will affect the coverage area of the device. However, the coverage area for a transmitter is usually between 2.5 to 5 meters radius.

For early leakage detection, install the sensor as close as possible to the potential leakage sources (flanges, valves, pressure reducers, pumps, etc.), taking into consideration other points listed above.

For general area monitoring without definite leakage sources, the transmitters should be distributed evenly in the room.

For personal safety control, the transmitters are installed in the breathing zone (at the height of the head of people or animals). The recommended sensor position is vertical, pointing downwards.

Wall mount version

Unscrew four lid screws and detach the lid from the transmitter. Attach the device to a wall with screws passing through mounting holes (for dimensions see the drawing in the next section).

Duct mount version

Cut a hole with a diameter of 36...45 mm in the air duct at the chosen mounting place. Place the rubber flange aligning the holes in the flange and the air-duct and fix the flange with four self-tapping screws. Pass the sensor probe through the flange and adjust it to the appropriate depth. Unscrew four lid screws and detach the lid from the transmitter.

Mounting dimensions

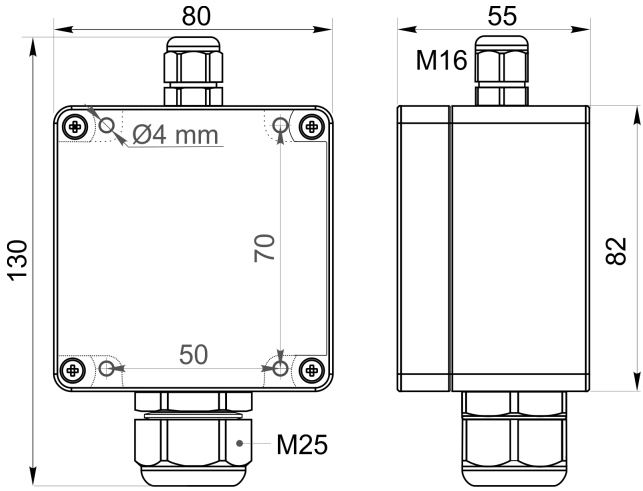

Wall mount version

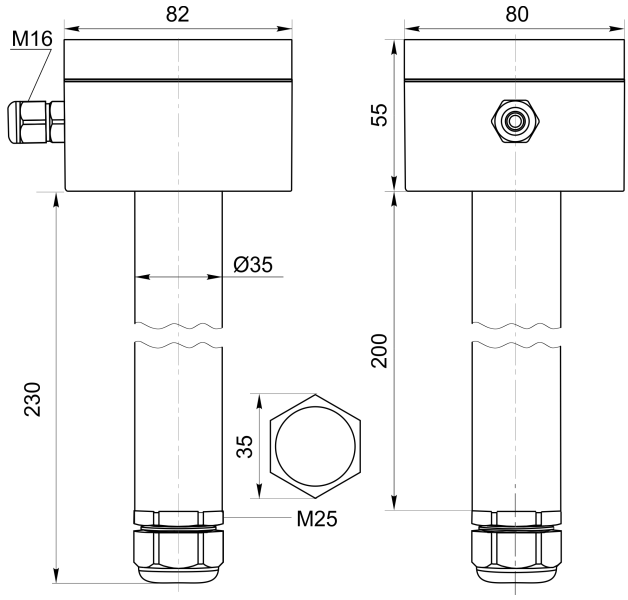

Duct mount version

Mounting dimensions (50KN sensor)

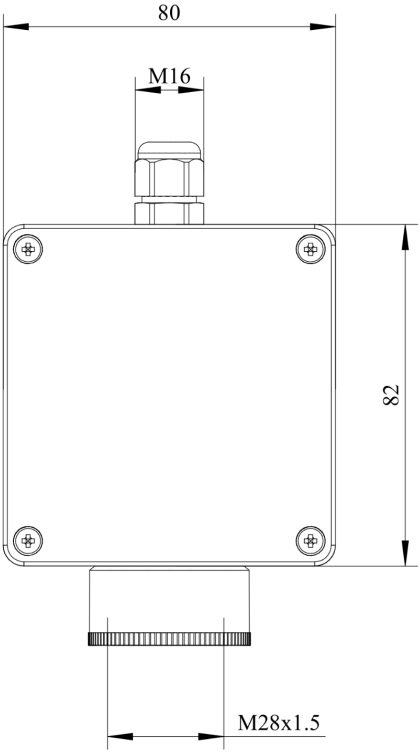

Front view

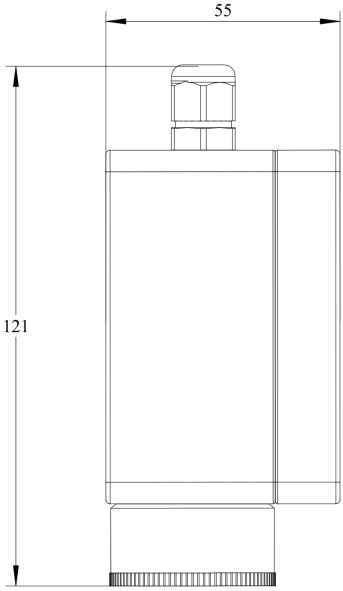

Side view

Sensor probe handling

The wall mount version of the transmitter is available with a remote probe (see drawing below for dimensions). The remote probe is connected to the main unit with a shielded cable. The default remote probe cable length is 3 m.

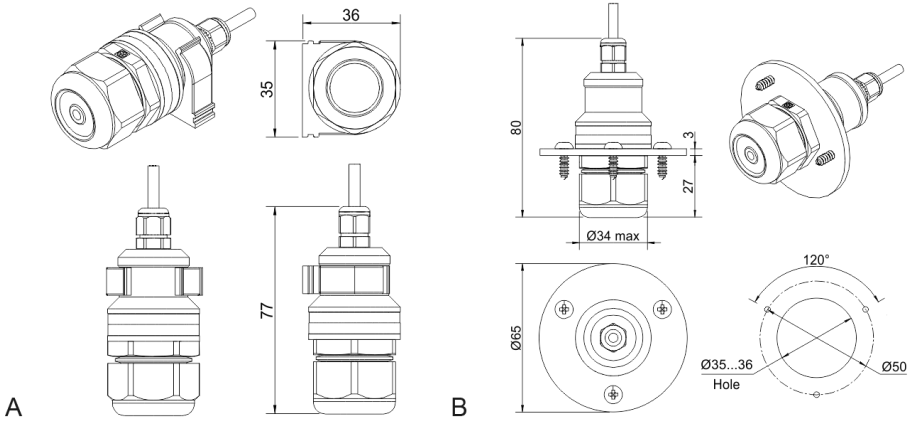

A) Wall mount remote probe with fixing clamp (default version),
B) Remote probe with rubber flange and three self-tapping screws (on request)

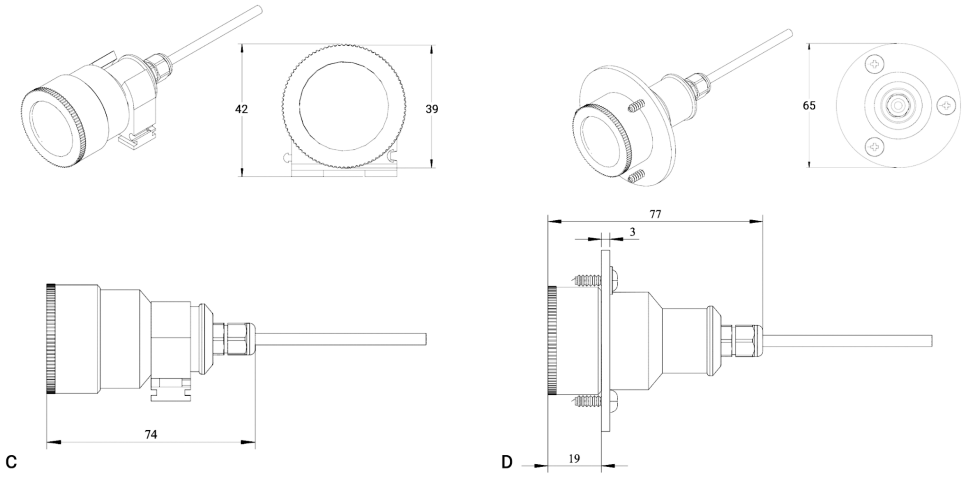

A) Wall mount remote probe with fixing clamp (default version),
B) Remote probe with rubber flange and three self-tapping screws (on request)

The sensor probes of all types are equipped with a hydrophobic microporous PTFE filter to protect the sensor from dust, dirt, and water drops. The filter should be replaced if it gets strongly contaminated. To replace the PTFE filter, unscrew the sensor head cap and remove the old filter. Place a new filter into the cap and tighten it again.

NOTE! Never stab or press the filter near its center where the sensor is located since this may damage the sensor. Do not remove the filter as it may cause the device to show incorrect values and/or break the sensor.

The recommended orientation of the sensor probe is vertical with the sensor tip pointing downwards. This prevents the possible accumulation of condensed water on the sensor protection filter.

NOTE! Both sensors are replaceable only by the manufacturer.

Electrical connections

Unscrew four lid screws and detach the lid from the device. Use the M16 cable gland to let in cables of the power supply and of the external devices. Attach the power cable to the device without turning it on. Using the connection diagram below, connect the analog outputs and digital interface terminals to the relevant devices according to your tasks.

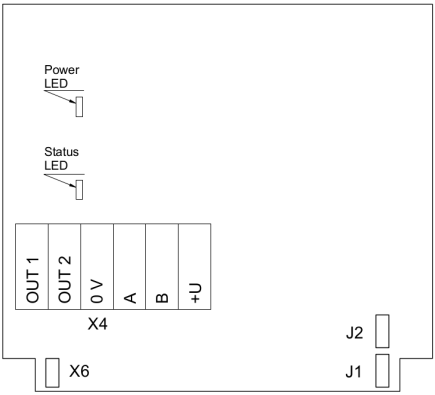

PCB without PSU and relays

Jumpers	
J1	OUT1 type (open: 4-20 mA; closed 0-10 V)
J2	OUT2 type (open: 4-20 mA; closed 0-10 V)
X6	Reset Modbus network parameters to default
X4 terminals	
OUT1	4-20 mA / 0-10 V output
OUT2	4-20 mA / 0-10 V output
0V	0 V / 24 VAC Neutral (optional)
A	RS485 A / Data +
B	RS485 B / Data -
+U	+24 VDC / 24 VAC Phase (optional)

The screwless quick connect spring terminals on the E2618 series devices are suitable for a wide range of wires with a cross-section of 0.2...1.5 mm^2. We recommend striping the wire end by 8...9 mm and using wire end sleeves.

To connect the wire, insert the wire end into the terminal hole. To disconnect, push the spring-loaded terminal lever, pull the wire out, and release the lever.

Use a twisted-pair cable, e.g. LiYY TP 2×2×0.5 mm^2 or CAT 5, to connect the device to the RS485 network. A and B on the device represent DATA+ and DATA-, respectively, polarity must be respected when connecting to an external RS485 network.

Both analog outputs can be independently changed between 4-20 mA and 0-10 V type using jumpers J1 (OUT1) and J2 (OUT2). By closing pins on a specific jumper the related output is 0-10 V, with an open jumper the output is 4-20 mA. Power restart is required after changing the position of the jumpers.

Correct and incorrect cabling for 24 VAC

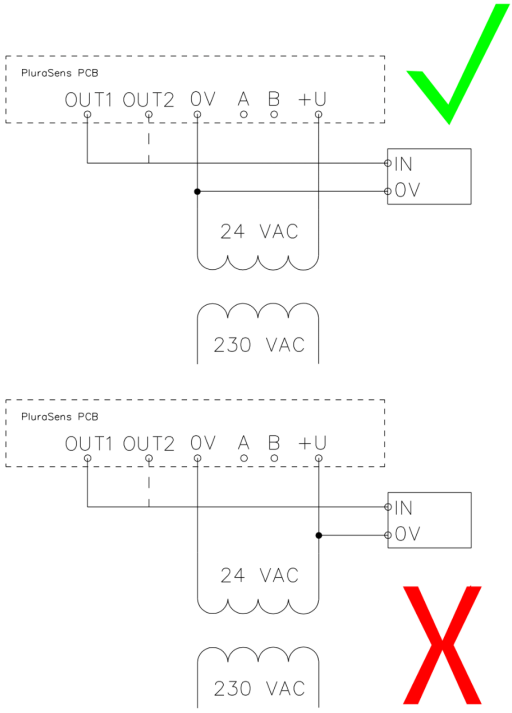

Operation

Turn on the power. The instrument warm-up time takes about 1 minute after switching on and the final sensor stabilization time to maximum accuracy takes about 15 minutes. The operating status is indicated by the LED on the PCB of the device. The control LED (red) response to different processes is presented in the following table:

Mode	LED mode
During calibration mode or sensor heating period (if activated)	0.5 Hz (50% on, 50% off)
During Modbus communication cycle	Short on-off pulses
Normal operating/measurement	Continuously on or off

Make sure that the transmitter is properly mounted, the external devices connected, power LED (green) on and control LED (red) constantly lit. Place the lid back and fix it with the screws. The device is ready to use.

Maintenance

Do not perform any maintenance operation with the power on.

Clean the device with a soft damp cloth. Do not use any abrasive cleaning agents. Do not immerse the device in water or any cleaning media.

Calibration

E2618-CO2 gas transmitters have been calibrated by the Manufacturer with standard gas mixtures before delivery. 10K and 40K sensors do not require recalibration if the ABC algorithm is enabled. Provided that the sensor is used under moderate conditions, field recalibration is recommended once a year for the 50KN sensor. Please contact your dealer for more information.

Delivery set

- Gas transmitter E2618 (wall mount, duct mount, or remote probe version)
- Mounting accessories:
    - 4 screws with plastic dowels for wall mount version
    - Square Rubber flange for Duct mount option
    - Round rubber flange for Remote probe option
    - Fixing clamp for Remote probe option

Order code for E2618-CO2 options

E2618 options	Order code
Remote probe, 3 m cable	E2618-CO2-RP33-3
Remote probe, 10 m cable	E2618-CO2-RP33-10 (for 50KN)
Duct mount option, stem Ø35×L230 mm	E2618-CO2-DM
Integrated 24 VAC power supply module	E2618-CO2-24VAC

Configuring

A standard configuration kit includes a USB-RS485 converter, fixed flow regulator, gas tubing with applicators, and a software pack. Please contact your Seller for more information.

Gas transmitters E2618 share all functionalities of the PluraSens® multifunctional transmitter platform. The features and options include:

- Digital output change rate-limiting filter
- Digital integrating (averaging) filter
- Free assignment of each analog output to the chosen parameter
- Flexible setting of analog output scales for each output
- Output zero and slope adjustment for calibration

The output scales can be changed by Modbus commands by using the configuration software and the standard configuration kit (see Modbus RTU Communication).

Return to default settings

To reset the device's Slave ID, baud rate, and stop bit numbers to factory settings, proceed as follows:

1. De-energize the device
2. Connect the X6 jumper
3. Turn on the device
4. De-energize the device
5. Disconnect the X6 jumper
6. Turn on the device

NOTE! Cables should be connected/disconnected from PCB when the power supply is unplugged. Connecting or Disconnecting Live wires can result in Corrupt Firmware.

Modbus RTU Communication

RS485 communication interface

Databits: 8 Parity: none / odd / even Stop bits: 1 or 2 Protocol: Modbus RTU	Supported Modbus functions: 03 – Read multiple registers 06 – Write a single register

Communication parameters

Parameter	Permitted values	Default
Supported baud rates	1200, 2400, 4800, 9600, 19200, 38400, 57600	9600
Data bits	8	8
Parity	none / odd / even	none
Stop bits	1, 2	1
Protocol	Modbus RTU	
Modbus functions	03 - Read multiple registers 06 - Write a single register	
Error codes	01 – Illegal function 02 – Illegal data address 03 – Illegal data value 04 – Slave device failure (details of last error 04 can be read from register 0x0008)	

Modbus holding registers

Register addresses are shown 0-based, Address in hexadecimal, Reg in decimal format. Modbus holding register numbers MHR are shown in the decimal 1-based format and may be addressed either from 00001 or 40001 base.

Address	Reg / MHR	RW	Description	Supported values (dec)	Default
0x0001	1 / 40002	R	Hardware version		-
0x0002	2 / 40003	R	Software version		-
0x0003	3 / 40004	R	Product serial number	1...65535	-
0x0004	4 / 40005	RW	Slave ID (net address) *	1...247 **	1

0x0005	5 / 40006	RW	Baud rate *	1200, 2400, 4800, 9600, 19200, 38400, 57600	9600
0x0006	6 / 40007	RW	Response delay, ms	1...255	10
0x0007	7 / 40008	RW	Stop bits, parity bit *	1 – No parity bit, 1 stop bit (default after factory reset) 2 – No parity bit, 2 stop bits 3 – Odd parity, 1 stop bit 4 – Even parity, 1 stop bit **NOTE**: 3 and 4 are available starting from the Software version 0x218 (dec. 536)	1
0x0008	8 /40009	R	Last error code	1...255	-
0x0011	17 / 40018	RW	Technological: age of last data in seconds (read) / restart (write)	0...65535 s (read), writing 42330 restarts the instrument	-

0x00A5	165 / 40166	RW	Zero adjustments for gas data, ADC	-32000...+32000 ADC units	0
0x00A6	166 / 40167	RW	Slope adjustment for gas data	1...65535	512
0x00A7	167 / 40168	RW	Change rate limit for gas data, units / s	1...32000, 0 - no limit	0
0x00A8	168 / 40169	RW	Integrating filter time constant, s	1...32000 (seconds), 0 - no filter	0
Address	**Reg / MHR**	**RW**	**Description**	**Supported values (dec)**	**Default**
0x00C9	201 / 40202	RW	Parameter tied to analog output 1	0 – None 2 – Gas concentration 9 – Forced Modbus control, value set in MHR / 40204	2
0x00CA	202 / 40203	RW	Parameter tied to analog output 2	0 – None 2 – Gas concentration 9 – Forced Modbus control, value set in MHR / 40205	2
0x00CB	203 / 40204	RW	Forced value for analog output 1***	0...1000 (0.0%...100.0% of output scale)	0
0x00CC	204 / 40205	RW	Forced value for analog output 2***	0...1000 (0.0%...100.0% of output scale)	0

0x00FF	255 / 40256	RW	Sensor, analog outputs, LED and buzzer status	bit[0]=0/1 – sensor present/absent, **RO** bit[1]=0/1 – analog outputs deactivated/activated bit[2]=0/1 – in case the sensor is absent, turn signaling off/on analog output1 bit[3]=0/1 – in case the sensor is absent, turn on signaling with low current/high current on analog output1; if bit[2]=0 this bit will be ignored bit[4]=0/1 – in case of sensor absent, turn signaling off/on analog output2 bit[5]=0/1 – in case of sensor absent, turn on signaling with low current/high current on analog output2; if bit[4]==0 this bit will be ignored bit[6]=0/1 – current/voltage output detected on output1, **RO** bit[7]=0/1 – current/voltage output detected on output2, **RO** bit[8]=0/1 – LED deactivated/activated bit[9]=0/1 – buzzer deactivated/activated (always 0 for E2618) bit[10]=0/1 - LED is on/off in normal condition	
Address	**Reg / MHR**	**RW**	**Description**	**Supported values (dec)**	**Default**
0x0101	257 / 40258	R	Raw gas sensor data	0...4095, ADC units	
0x0103	259 / 40260	R	Gas concentration, gas units	0...65535, gas units	
0x0105	261 / 40262	RW	0% value for analog output 1	-32000...+32000, gas units	User defined
0x0106	262 / 40263	RW	100% value for analog output 1	-32000...+32000, gas units	User defined
0x0107	263 / 40264	RW	0% value for analog output 2	-32000...+32000, gas units	User defined
0x0108	264 / 40265	RW	100% value for analog output 2	-32000...+32000, gas units	User defined

* – The new value is applied after restart.

** – Broadcast slave ID 0 can be used to assign a new ID to the instrument with an unknown ID. When addressing by ID 0 the device shall be the only Modbus instrument in the network. The device will not respond to the Master command when addressed by ID 0.

*** – This value is dynamic and not kept in EEPROM after a restart.

Warranty

This product is warranted to be free from defects in material and workmanship for a period of one year from the date of the original sale. During this warranty period, the Manufacturer will, at its option, either repair or replace a product that proves to be defective. This warranty is void if the product has been operated in conditions outside ranges specified by the Manufacturer or damaged by customer error or negligence or if there has been an unauthorized modification.

Manufacturer contacts

Evikon MCI OÜ

Teaduspargi 9, Tartu
50411 Estonia
info@evikon.eu
www.evikon.eu