DATASHEET

E2618

Evikon

Distributed by AKRIBIS

IP65 | 4-20 mA 0-10 V | RS485 Modbus

Solvent Vapours Transmitter E2618-PID

Features

- Highly sensitive Photo Ionization Detector
- Wall-mount or duct-mount version
- Industrial IP65 housing
- Two analog outputs settable to 4-20 mA or 0-10 V
- RS485 Modbus RTU digital interface
- Attached or remote sensor

Specifications

Detected gases	VOCs with ionisation potential < 10.6 eV	
Default calibration	Isobutylene	
Sensor type	Photo ionization detector (PID)	
Sampling method	Diffusion	
	E2618-PID-40	E2618-PID-200
Detection range	0...40 ppm (isobutylene)	0...200 ppm (isobutylene)
Resolution	0,01 ppm	1 ppm
Response time T90	< 3 s	
Signal update	Every 1 second	
Sensor lifetime	> 5 years	
Maintenance interval	Monthly or more frequently depending on operating conditions	
Self-diagnostics	Full functionality check at start-up	
Warm-up time	≤ 1 min	
Power supply	12...36 VDC (default) 24 VAC as option	
Power consumption	< 2 VA	
Digital interface	RS485, Modbus RTU protocol	
Analog outputs	2 × 4-20 mA / 0-10 V, user settable	
Output scale width	Recommended: 20-100% of the range; > 10 × resolution in any case	
Enclosure	Grey ABS plastic, wall mount, protection class IP65	
Dimensions	H82 × W80 × D55 mm	
Remote sensor probe	Protection IP65, shielded cable default cable length 3.0 m	
Operating environment	Industrial indoor and outdoor locations	
Operating conditions	-40...+65°C; 0...95% RH non-condensing; 0,9...1,1 atm; Explosion-safe areas Non-aggressive atmosphere	

Wall mount version

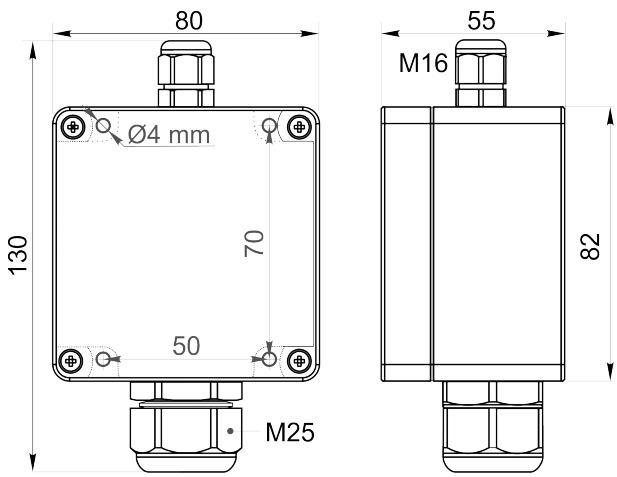

Duct mount version

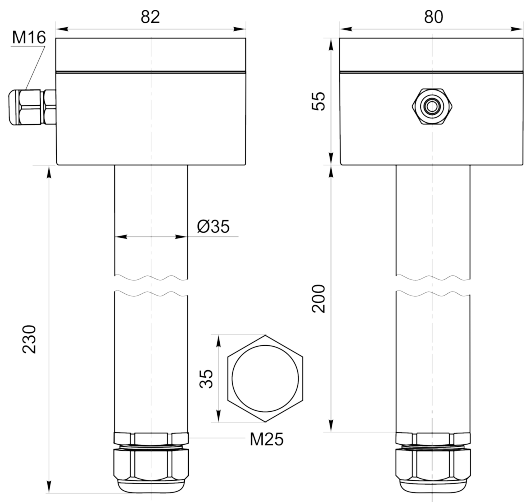

NOTE! All dimensions are in millimeters.

Ask for other versions or custom designed products

AKRIBIS · www.akribis.info · contacto@akribis.info

Connection diagram

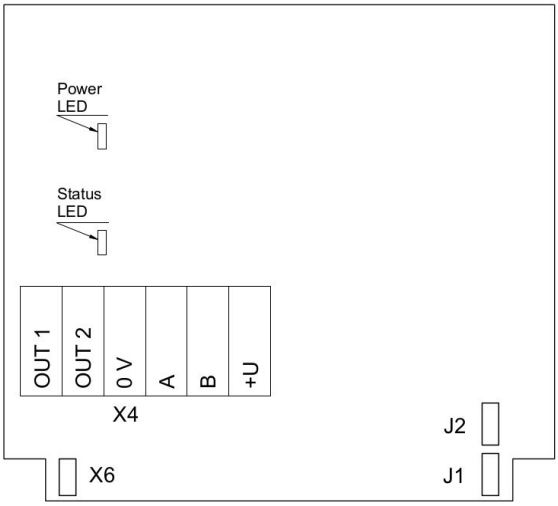

PCB without PSU and relays

Jumpers

J1	OUT1 type (open: 4-20 mA; closed 0-10 V)
J2	OUT2 type (open: 4-20 mA; closed 0-10 V)
X6	Reset Modbus network parameters to default

X4 terminals

OUT1	4-20 mA / 0-10 V output
OUT2	4-20 mA / 0-10 V output
0V	0 V / 24 VAC Neutral (optional)
A	RS485 A / Data +
B	RS485 B / Data -
+U	+24 VDC / 24 VAC Phase (optional)

Remote probe

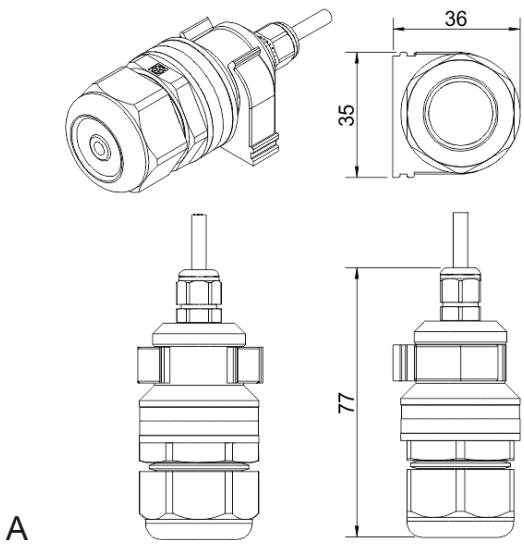

Wall mount remote probe with fixing clamp (default version)

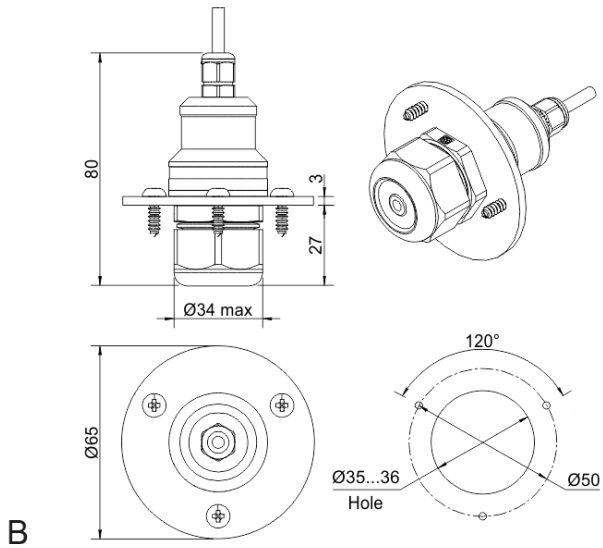

Remote probe with rubber flange and three self-tapping screws (on request)

NOTE! All dimensions are in millimeters.