DATASHEET

E2617

Evikon

Distributed by AKRIBIS

IP65 | 4-20 mA 0-10 V

Combustible Gases Transmitter E2617-LEL

Features

- High long-term stability
- User selectable output 4-20 mA / 0-10 V
- Fully calibrated and temperature compensated
- Low cost for volume HVAC applications

Specifications

Detectable gases	Hydrogen, propane, methane, butane
Sensor type	Pellistor (Catalytic Bead)
Sampling method	Diffusion
Detection ranges	0-100 %LEL
Response time T90	≤ 10 s
Sensor protection	Microporous PTFE dust filter
Analog output	4-20 mA / 0-10 V, user selectable
Power supply	24 VDC ± 20%
Power consumption	< 1 W
Sensor lifetime	> 3 years *in an appropriate residential or light commercial applications
Sensitivity drift	< ± 5% / year *in an appropriate residential or light commercial applications
Enclosure	Grey ABS plastic, wall mount, protection class IP65
Dimensions	H82 × W94 × D35 mm
Operating conditions	-20…+60°C, 0-95 %RH non-condensing, pressure 900 to 1100 mbar Explosion safe indoor areas Avoid strong mechanical shock, vibrations, or EMI Avoid exposure to corrosive gases **NOTE!** The sensor may exhibit sensitivity to most combustible gases.
EMC Emissions	To EN 61000-6-3, EN 61326-1
EMC Immunity	To EN 61000-6-1, EN 61000-6-2

Dimensions

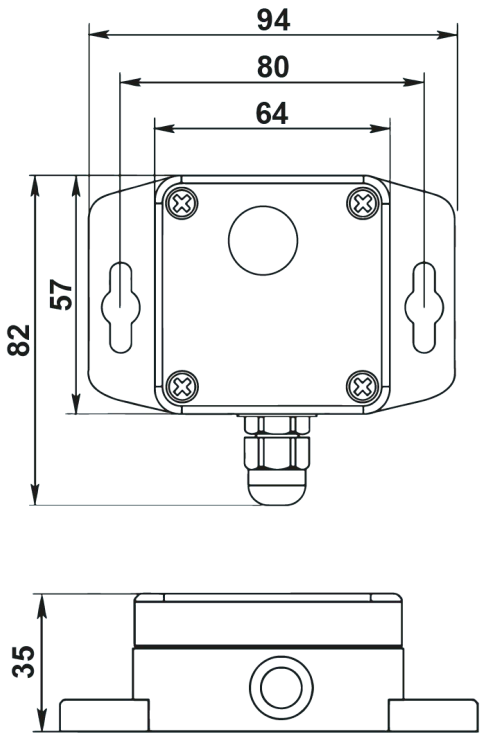

Connection diagrams

3-wire 4-20 mA output

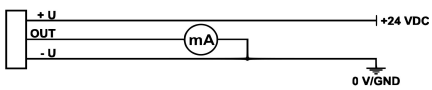

3-wire 0-10 V output

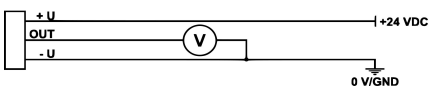

Ask for other versions or custom designed products

AKRIBIS · www.akribis.info · contacto@akribis.info