DATASHEET

E2617

Evikon

Distributed by AKRIBIS

IP65 | 4-20 mA 0-10 V

Carbon Monoxide Transmitter
E2617-CO

Features

- High long-term stability
- User selectable output 4-20 mA / 0-10 V
- Fully calibrated and temperature compensated
- Low cost for volume HVAC applications

Specifications

Sensor type	Electrochemical
Sampling method	Diffusion
Detection ranges	0-100 ppm, 0-200 ppm, 0-300 ppm
Maximum overload	2000 ppm
Response time T90	< 30 s
Sensor protection	Microporous PTFE dust filter
Warm-up time	≤ 1 min
Analog output	4-20 mA / 0-10 V, user selectable
Power supply	24 VDC ± 20%
Power consumption	< 1 W
Sensor lifetime	> 10 years in fresh air
Sensitivity drift	< 5% per annum
Enclosure	Grey ABS plastic, wall mount, protection class IP65
Dimensions	H82 × W94 × D35 mm
Operating conditions	-20…+50°C, 15-90 %RH non-condensing, pressure 800 to 1200 mbar
EMC Emissions	To EN 61000-6-3, EN 61326-1
EMC Immunity	To EN 61000-6-1, EN 61000-6-2

Dimensions

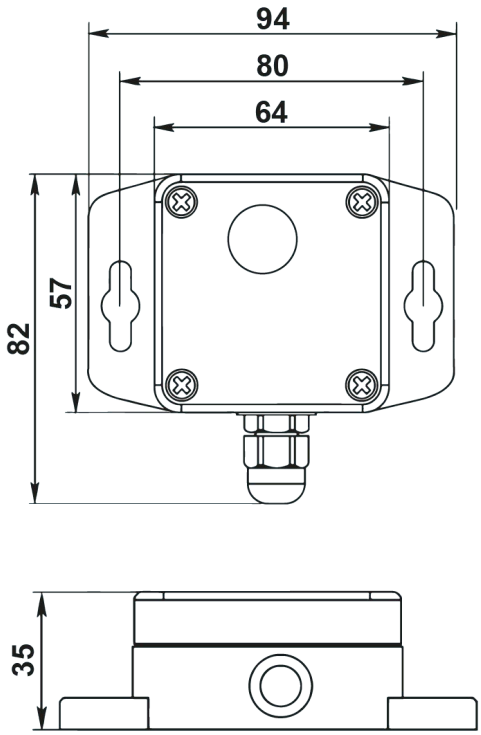

Connection diagrams

3-wire 4-20 mA output

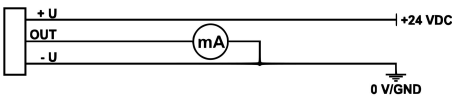

3-wire 0-10 V output

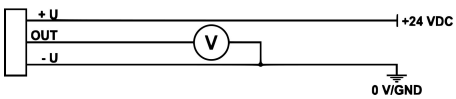

Ask for other versions or custom designed products

AKRIBIS · www.akribis.info · contacto@akribis.info