USER GUIDE

E2608

Evikon

Distributed by AKRIBIS

PluraSens®

Solvent Vapor Detector-Transmitter

E2608-PID

User Manual

Evikon

AKRIBIS · www.akribis.info · contacto@akribis.info

Table of contents

Acetone 3
Benzene 4
Ethanol 5
Ethyl acetate 6
Toluene 7
Xylene 8
Specifications 9
Product description 11
Safety requirements 11
PID (photoionization detector) technology 12
Operating conditions 12
Installation guidelines 13
    Wall mount version 13
    Duct mount version 13
Mounting dimensions 14
Sensor probe handling 15
Gas sensor replacement procedures 15
Electrical connections 16
    Correct and incorrect cabling for 24 VAC 18
Operation 19
Properties of VOC: ionization energy, the correction factor 20
Calibration and maintenance 49
Delivery set 53
    Order code for E2608-PID options 53
Configuring 54
Return to default settings 54
Modbus RTU Communication 55
    RS485 communication interface 55
    Communication parameters 55
Modbus holding registers 55
Warranty 60
Manufacturer contacts 60

Acetone

A colorless organic solvent with a characteristic pungent odor that is volatile and flammable with the chemical formula $(CH_3)_2CO$.

Synonyms/Trade Names: Dimethyl ketone, Ketone propane, 2-Propanone.

Chemical formula		$(CH_3)_2CO$
Molar weight		58
Relative gas density (to air)		2.0
Conversion*		1 ppm = 2.38 mg/m^3
Boiling point		56.11 °C
Low explosive limit (LEL), % vol. in air		2.5
Upper explosive limit (UEL), % vol. in air		12.8
Odor		Characteristic pungent smell
Hazards		Highly flammable. Slightly toxic in normal use. Irritant causing mild skin irritation and moderate to severe eye irritation. At high vapor concentrations, it may depress the CNS.
Exposure limits	8 hours (2000/39/EC)	1900 mg/m^3 / 500 ppm
	NIOSH REL TWA	590 mg/m^3 /250 ppm
	IDLH (NIOSH)	2500 ppm [10%LEL]

Benzene

A colorless liquid with an aromatic odor that is highly flammable with the molecular formula C_6H_6.

Synonyms/Trade Names: Benzol, Phenyl hydride.

Chemical formula		C_6H_6
Molar weight		78
Relative gas density (to air)		2.69
Conversion*		1 ppm = 3.19 mg/m^3
Boiling point		80 °C
Low explosive limit (LEL), % vol. in air		1.2
Upper explosive limit (UEL), % vol. in air		7.8
Odor		Hyacinth-like odor
Hazards		Highly flammable. Irritant. Carcinogen. May cause dizziness; headache, nausea, staggering gait; anorexia, lassitude. Target organs: eyes, skin, respiratory system, blood, central nervous system, bone marrow.
Exposure limits (NIOSH REL)	Ca TWA	0.319 mg/m^3 /0.1 ppm
	STEL 15 minutes	1 ppm
	Ca IDLH	500 ppm

Ethanol

A clear colorless liquid with a faintly sweet odor and pungent taste.

Synonyms/Trade Names: ethyl, alcohol.

Chemical formula		CH_3CH_2OH
Molar weight		46
Relative gas density (to air)		1,59
Conversion*		1 ppm = 1.89 mg/m^3
Boiling point		78.37°C
Low explosive limit (LEL), % vol. in air		3 - 3.3
Upper explosive limit (UEL), % vol. in air		19
Odor		The characteristic smell of alcohol
Hazards		Highly flammable. Gas/air mixtures are explosive. Inhalation of vapors leads to cough, headache, fatigue, and drowsiness. High concentrations may damage the fetus. Repeated high exposure may affect the liver and the nervous system.
Exposure limits according to Commission Directive 2006/15/EC	TWA 8 hours	1210 mg/m^3 / 1000 ppm
	STEL 15 minutes	-

Ethyl acetate

A colorless organic compound with a sweet pear-like smell that is highly flammable.

Synonyms/Trade Names: ethyl ester, acetic ester, EA, EtOAc.

Chemical formula		$C_4H_8O_2$ 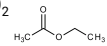
Molar weight		88
Conversion*		1 ppm = 3.60 mg/m^3
Boiling point		77.1 °C
Low explosive limit (LEL), % vol. in air		2
Upper explosive limit (UEL), % vol. in air		11.5
Odor		Sweet “pear” smell
Hazards		Flammable. Short-term exposure to high levels of ethyl acetate results first in irritation of the eyes, nose, and throat, followed by headache, nausea, vomiting, sleepiness, and unconsciousness.
Exposure limits (NIOSH)	TWA 8 hours	1400 mg/m^3 /400 ppm
	IDLH	2000 ppm [10%LEL]

Toluene

A clear, colorless liquid with a sweet smell that is highly flammable.

Synonyms/Trade Names: methylbenzene, phenylmethane.

Chemical formula		$C_6H_5CH_3$
Molar weight		92
Conversion*		1 ppm = 3.77 mg/m^3
Boiling point		110.7°C
Low explosive limit (LEL), % vol. in air		1.1 - 1.27
Upper explosive limit (UEL), % vol. in air		6.75–7.1
Odor		Characteristic “chemical” smell
Hazards		Highly flammable. Gas/air mixtures are explosive. Inhalation possible effects: irritation eyes, nose; lassitude (weakness, exhaustion), confusion, euphoria, dizziness, headache; dilated pupils, lacrimation (discharge of tears); anxiety, muscle fatigue, insomnia; paraesthesia; dermatitis; liver, kidney damage
Exposure limits according to Commission Directive 2006/15/EC	TWA	192 mg/mm^3 / 50 ppm
	STEL	384 mg/mm^3 / 100 ppm

Xylene

A colorless, flammable liquid with a chemical smell. Xylenes are produced by the methylation of toluene and benzene.

The term is used for any of three isomers of dimethylbenzene, or a combination thereof.

Synonyms/Trade Names: xylol, dimethylbenzene.

Chemical formula		$C_6H_4(CH_3)_2$		
Isomers		*ortho*-xylene	*meta*-xylene	*para*-xylene
Molar weight		106		
Conversion*		1 ppm = 4.34 mg/m^3		
Boiling point		144.4 °C	139 °C	138.35 °C
Low explosive limit (LEL), % vol. in air		0.9 - 1.1		
Upper explosive limit (UEL), % vol. in air		6.0–7.0		
Odor		Characteristic “chemical” smell		
Hazards		Flammable. Inhaling can cause dizziness, headache, drowsiness, and nausea.		
Exposure limits according to Commission Directive 2000/39/EC	TWA 8 hours	221 mg/mm^3 / 50 ppm		
	STEL 15 minutes	442 mg/mm^3 / 100 ppm		

Conversion of ppm to mg/m^3 is calculated for 25°C and 1 atm.

Specifications

Detected gases	VOCs with ionisation potential < 10.6 eV	
Sampling method	Diffusion	
Sensor type	Photoionization detector	
Calibration	Isobutylene	
Order code	E2608-PID-40	E2608-PID-200
Typical detection ranges	0...40 ppm (isobutylene)	0...200 ppm (isobutylene)
Resolution / digital unit	0,01 ppm	1 ppm
Response time T90	< 3 s	
Sensor lifetime	5 years	
Calibration interval	Monthly or more frequently depending on operating conditions	
Signal update	Every 1 second	
Load resistance	R_L < (Us - 2 V) / 22 mA for 4-20 mA R_L > 250 kOhm for 0-10 V mode	
Digital interface	RS485, Modbus RTU protocol No galvanic isolation	
Power supply	12...36 VDC (default), 24 VAC or 230 VAC as options	
Power consumption	< 2 VA	
Analog outputs	2 × 4-20 mA / 0-10 V, user settable	
Outputs assignment	OUT1: Gas; OUT2: Gas	
Relay outputs	2 × SPST, max 5 A, 30 VDC / 250 VAC	
Alarm setpoints	Determined by the user within 5-95% of the detection range	
Cable connections	Screwless spring-loaded terminals	
Enclosure	Grey ABS, wall mount, protection class IP65	
Dimensions	H87 × W82 × D55 mm	
CE marking	According to 2014/30/EU and 2014/35/EU, EN 50491-4-1:2012 EN 61000-6-3:2020, EN 61326-1:2013(EMC, emissions) EN 61000-6-1:2019, EN 61000-6-2:2019(EMC, Immunity) EN 60079-29-1:2016, EN 60079-29-2:2015 and EN 60079-29-3:2014	

Operating conditions	-40...+65ºC; 0,9...1,1 atm 0...95% RH non-condensing, Explosion safe indoor areas, Non-aggressive atmosphere
Other options	
Remote probe	Protection IP65, default cable length 3.0 m; max height 80 mm, max diameter 65 mm

Product description

E2608 series detectors-transmitters belong to the PluraSens® family of multifunctional measurement instruments. The instruments utilize gas sensors of various types with excellent repeatability, stability, and long lifetime.

The E2608 series provides two independent analog outputs OUT1 and OUT2, user-selectable to 4-20 mA or 0-10 V. RS485 Modbus RTU digital communication interface allows easy instrument configuration and integration into various automation systems.

Two relays RE1 and RE2 with closing dry contacts can be used to switch alarm sirens, ventilation fans, shut-off valves, or other actuators. Remote probe, duct mount version and 24 VAC or 230 VAC power supply options are available.

The version of your detector-transmitter is marked on the package. If the symbol ⚠️ is marked on the equipment, consult the documentation for further information.

Safety requirements

Misuse will impair the protection of the product. Always adhere to the safety provisions applicable in the country of use.

Do not perform any maintenance operation with the power on. Do not let water or foreign objects inside the device.

Removal of the PCB from the enclosure voids the warranty. Do not touch the electronic components directly, as they are sensitive to static electricity.

Connection diagrams can be found in the electrical connections section. The device might not perform correctly or be damaged if the wrong power supply is connected.

External circuits connected to the equipment should have sufficient insulation rating according to the environmental conditions and equipment power.

A disconnecting device that is marked as such and easily accessible should be included in the installation of this product.

PID (photoionization detector) technology

The gas under investigation diffuses into the sensor's testing cell, equipped with a source of high energy UV light (10.6 eV Krypton lamp) and electrodes. Exposed to UV light, organic molecules decompose to form ions, which are attracted by the electrodes. The measured resulting current is proportional to the VOC concentration.

Operating conditions

The device should be used both in a non-hazardous area and in a basic electromagnetic environment, where the latter is defined in EN 61326-1. Avoid strong mechanical shock and vibrations. Avoid corrosive atmosphere and areas highly contaminated with dust, oil mist, etc. Keep the instrument away from direct sunlight. A sudden temperature or humidity change might affect the sensitivity of the sensor.

Installation guidelines

Before proceeding with the installation it is mandatory to read the Safety requirements section and make sure to comply with all listed instructions. Installation standards EN 60079-29-2 and EN 45544-4 are also recommended for further instructions and related information about the installation. During the installation of the detector-transmitter the following points must be considered:

- Application (air quality control or leakage detection)
- Properties of the space under investigation (room geometry, direction, and velocity of airflows, etc.),
- Solvent vapors are heavier than air, so the gas detector-transmitter should be placed near the floor or potential leakage or formation source.
- The device should be accessible for maintenance and repair.

The aforementioned conditions above will affect the coverage area of the device. However, the coverage area for a detector-transmitter is usually between 2.5 to 5 meters radius.

For early leakage detection, install the sensor as close as possible to the potential leakage sources (flanges, valves, pressure reducers, pumps, etc.), taking into consideration other points listed above.

For general area monitoring without definite leakage sources, the detector-transmitters should be distributed evenly in the room.

For personal safety control, the detector-transmitters are installed in the breathing zone (at the height of the head of people or animals). The recommended sensor position is vertical, pointing downwards.

Wall mount version

Attach the mounting lugs to the back of the detector-transmitter using the provided screws. Screw the device to the wall through the mounting lug holes (for dimensions see the drawing in the next section).

Duct mount version

Cut a hole with a diameter of 36...45 mm in the air duct at the chosen mounting place. Place the rubber flange aligning the holes in the flange and the air-duct and fix the flange with four self-tapping screws. Pass the sensor probe through the flange and adjust it to the appropriate depth. Unscrew four lid screws and detach the lid from the detector-transmitter.

Mounting dimensions

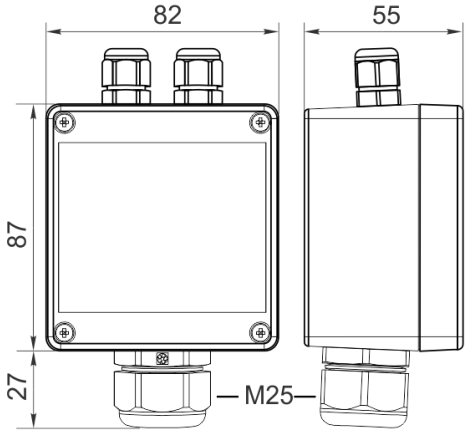

Wall mount version

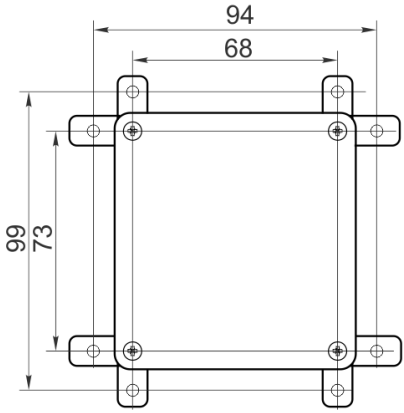

with mounting lugs

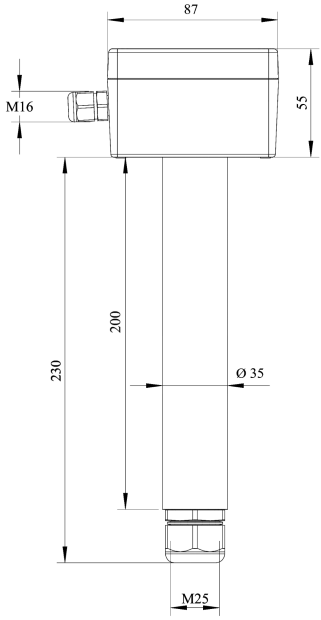

Duct mount version

Sensor probe handling

The wall-mount version of the detector-transmitter is available with a remote probe (see drawing below for dimensions). The remote probe is connected to the main unit with a shielded cable. The default remote probe cable length is 3 m.

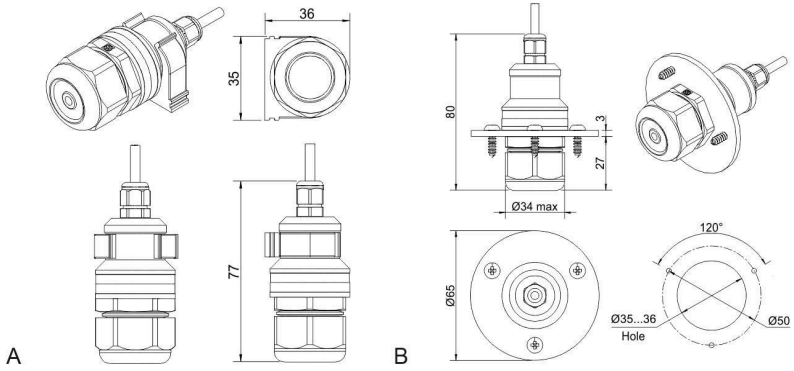

A) Wall mount remote probe with fixing clamp (default version),
B) Remote probe with rubber flange and three self-tapping screws (on request)

The sensor probes of all types are equipped with a hydrophobic microporous PTFE filter to protect the sensor from dust, dirt, and water drops. The filter should be replaced if it gets strongly contaminated. To replace the PTFE filter, unscrew the sensor head cap and remove the old filter. Place a new filter into the cap and tighten it again.

NOTE! Never stab or press the filter near its center where the sensor is located since this may damage the sensor. Do not remove the filter as it may cause the device to show incorrect values and/or break the sensor.

The recommended orientation of the sensor probe is vertical with the sensor tip pointing downwards. This prevents the possible accumulation of condensed water on the sensor protection filter.

Gas sensor replacement procedures

1. Remove the sensor head cap from the device (or the remote probe),
2. Remove the PTFE filter (if it is not removed within the cap),
3. Remove the O-ring rubber,
4. Detach the PID sensor from the device,
5. Insert the new PID sensor inside,
6. Put back the O-ring rubber, PTFE filter, and the head cap, respectively.

In most cases replacing the lamp and electrode stack can bring the sensor back to life.

Electrical connections

Unscrew four lid screws and detach the lid from the device. Use the M16 cable gland to let in cables of the power supply and of the external devices. Attach the power cable to the device without turning it on. Using the connection diagram below, connect the analog outputs and digital interface terminals to the relevant devices according to your tasks.

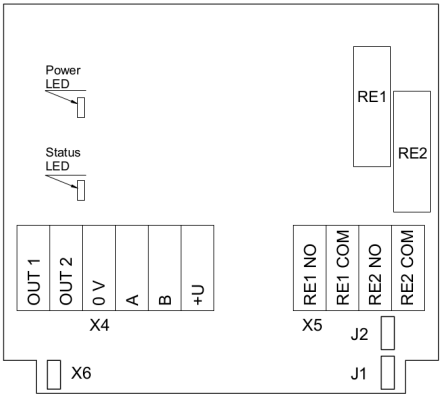

Version without PSU

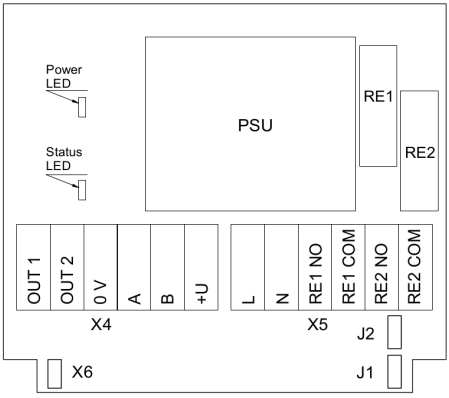

Version with PSU

Jumpers	
J1	OUT1 type (open: 4-20 mA; closed 0-10 V)
J2	OUT2 type (open: 4-20 mA; closed 0-10 V)
X6	Reset Modbus network parameters to default
X4 terminals	
OUT1	4-20 mA / 0-10 V output
OUT2	4-20 mA / 0-10 V output
0V	0 V / 24 VAC Neutral (optional)
A	RS485 A / Data +
B	RS485 B / Data -
+U	+24 VDC / 24 VAC Phase (optional)

X5 terminals (optional)	
L	90…265 VAC Phase
N	90…265 VAC Neutral
RE1 NO	Relay 1, normally open terminal
RE1 COM	Relay 1, common terminal
RE2 NO	Relay 2, normally open terminal
RE2 COM	Relay 2, common terminal

The screwless quick connect spring terminals on the E2608 series devices are suitable for a wide range of wires with a cross-section of 0.2...1.5 mm^2. We recommend striping the wire end by 8...9 mm and using wire end sleeves.

To connect the wire, insert the wire end into the terminal hole. To disconnect, push the spring-loaded terminal lever, pull the wire out, and release the lever.

Use a twisted-pair cable, e.g. LiYY TP 2×2×0.5 mm^2 or CAT 5, to connect the device to the RS485 network. A and B on the device represent DATA+ and DATA- respectively, polarity must be respected when connecting to an external RS485 network.

Both analog outputs can be independently changed between 4-20 mA and 0-10 V type using jumpers J1 (OUT1) and J2 (OUT2). By closing pins on a specific jumper the related output is 0-10 V, with an open jumper the output is 4-20 mA. Power restart is required after changing the position of the jumpers.

NOTE! The outputs are not galvanically isolated from the external power supply and share a common 0V. Allowed load resistance limits are stated in the Specifications table. To power the instrument from an external power source, connect terminals 0V and +U to the source. If the integrated mains power supply module is used, connect terminals L and N to the mains.

NOTE! Actuator short-circuits should be avoided, to protect the instrument relays using external fuses or safety switches.

Correct and incorrect cabling for 24 VAC

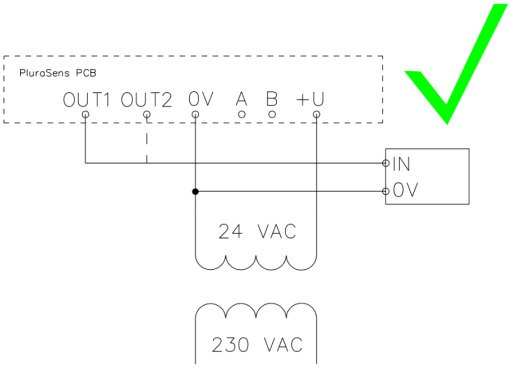

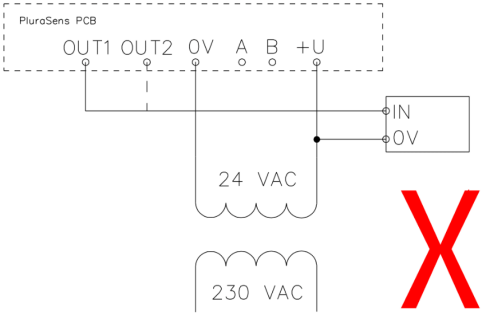

Operation

Turn on the power. The instrument warm-up time takes ≤1 minute after switching on and the final sensor stabilization time to maximum accuracy takes <5 minutes. The operating status is indicated by the LED on the PCB of the device. The control LED (red) response to different processes is presented in the following table:

Mode	LED mode
During calibration mode or sensor heating period (if activated)	0.5 Hz (50% on, 50% off)
Relay 1 turned on	Blinking 1 Hz (50% on, 50% off)
Relay 2 turned on	Blinking 2 Hz (50% on, 50% off)
During the Modbus communication cycle	Short on-off pulses
Normal operating/measurement	Continuously on or off

Make sure that the detector-transmitter is properly mounted, the external devices connected, power LED (green) on, and the control LED (red) is constantly lit. Place the lid back and fix it with the screws. The device is ready to use.

Properties of VOC: ionization energy, the correction factor

Sensors used in E2608-PID are calibrated using isobutylene, but the PID is a broadband VOC detector, with a sensitivity that differs for each VOC. If you know what VOC you are measuring, then the table below will allow you to calculate the concentration for your specific VOC. Only the most common substances are listed in the table, if you can't find your compound of concern, please contact us.

NOTE! These are approximate values, so for the best accuracy, you should calibrate with the relevant VOC.

The table includes the following columns:

1. The most common name for the VOC or other substances,
2. CAS No; You can find the VOC using the CAS No,
3. Brutto-formula,
4. Ionization energy (IE), (eV)
5. Relative Response/ Correction Factor (CF), Also called the Response Factor (RF). Multiply the displayed concentration by the Relative Response/CF/RF to calculate the actual concentration of the VOC.
6. Minimum Detection Level (MDL) Also called Minimum Detectable Quantity (MDQ). The typical lowest concentration that can be detected. The sensor used in E2608-PID-40 has greater sensitivity than that in E2608-PID-200, so the MDL for the E2608-PID-40 will be much less than the MDL for the E2608-PID-200.

The Relative Response/CF/RF is measured in dry air; high humidity will reduce this factor by 30% to 50%, so the CF/RF should be increased in high humidities. Relative sensitivity is the inverse of the correction factor, specifying the percent response of the VOC, relative to isobutylene. If less than 100%, then the VOC is less responsive than isobutylene; if the relative sensitivity is greater than 100%, then the VOC is more responsive than isobutylene. Relative sensitivity (%) is specified in the same way as cross-sensitivity for toxic gas sensors.

VOC response

The PID can not measure all VOCs or gases, two types of VOCs are not measured:

NR: No response. The lamp does not ionize the VOC and the VOC cannot be measured.

NV: The vapor pressure of the VOC at 20°C is less than a few ppm, so this Semi-Volatile Organic Compound (SVOC) cannot be measured.

NA: Not available

Occasionally you will be measuring a mixture of VOCs. If the total concentration is within the linear range of your PID, then it is reasonable to assume that the concentrations are additive without interference between the different VOCs. Remember that if you are measuring a combination of VOCs, then the accurate measurement of one of these VOCs will be difficult; without careful data analysis, you will get only a CF averaged measurement. Be cautious when reporting actual VOC concentration if you know that there may be several VOCs present.

Balance gas

The relative response is measured in laboratory air, with 20.9% oxygen, balanced nitrogen. Some gases absorb UV light without causing any PID response (e.g. methane, ethane). In ambient atmospheres where these gases are present, the measured concentration of target gas will be less than is actually present.

Methane absorbs UV strongly, so for accurate measurements in methane containing atmospheres, calibrate with a calibration gas containing the expected methane concentration. 50% of LEL methane reduces the reading by up to 50%. Gases such as nitrogen and helium do not absorb UV and do not affect the relative response.

The correction factor for a gas mix containing PID detectable gases A, B, C… with response factors RF(A), RF(B), RF(C), in relative proportions a: b: c… is given by:

CF(mix) = 1 / [(a/CF(A) + b/CF(B) + c/CF(C)…]

Accuracy of the Table: This table is for indication only. Table accuracy is 1 to 2 digits only, so when calculating concentration for a specific VOC, only specify to 1 or 2 digits.

Index	Chemical name	Formula	CAS no.	10.6 eV
1	Acenaphthalene	C12H8	208-96-8	0.7
2	Acenaphthene	C12H10	83-32-9	0.7
3	Acetaldehyde	C2H4O	75-07-0	5.5
4	Acetamide	C2H5NO	60-35-5	2
5	Acetic acid	C2H4O2	64-19-7	28
6	Acetic Acid 2-Hydroxyethyl Ester	C4H8O3	542-59-6	1.5
7	Acetic anhydride	C4H6O3	108-24-7	4
8	Acetoin	C4H8O2	513-86-0	1.4
9	Acetone	C3H6O	67-64-1	1.17
10	Acetophenone	C8H8O	98-86-2	0.8
11	Acetyl bromide	C2H3BrO	506-96-7	8
12	Acrolein	C3H4O	107-02-8	3.2
13	Acrylic acid	C3H4O2	79-10-7	21
14	Adamantane	C10H16	281-23-2	1
15	Alkanes, n-, C6+	CnH2n+2	N/A	1.2
16	Alkanes, C11-15-iso-		90622-58-5	1
17	Alkanes, C12-14-iso-		68551-19-9	1
18	Allyl acetoacetate	C7H10O3	1118-84-9	1.5
19	Allyl alcohol	C3H6O	107-18-6	2.3
20	Allyl bromide	C3H5Br	106-95-6	3
21	Allyl chloride	C3H5Cl	107-05-1	3.3
22	Allyl glycidyl ether	C6H10O2	106-92-3	0.8
23	Allyl methacrylate	C7H10O2	96-05-9	2
24	Allyl propyl disulfide	C6H12S2	2179-59-1	0.4
25	Allyl isothiocyanate	C4H5NS	57-06-7	2
26	Ammonia	NH3	7664-41-7	8.5
27	Amyl acetate	C7H14O2	628-63-7	1.8
28	Amyl alcohol	C5H12O	71-41-0	2.6
29	Amyl alcohol, tert-	C5H12O	75-85-4	1.5

Index	Chemical name	Formula	CAS no.	10.6 eV
30	Amyl salicylate	C12H16O3	2050-08-0	4
31	Anethole	C10H12O	104-46-1	0.4
32	Anisole	C7H8O	100-66-3	0.59
33	Anisyl aldehyde	C8H8O2	123-11-5	0.4
34	Aromatic hydrocarbons, C8	H8H10	90989-38-1	0.55
35	Asphalt, petroleum fumes		8052-42-4	1
36	Benzaldehyde	C7H6O	100-52-7	0.7
37	Benzene	C6H6	71-43-2	0.5
38	Benzoic acid	C7H6O2	65-85-0	0.7
39	Benzonitrile	C7H5N	100-47-0	0.53
40	Benzophenone	C13H10O	119-61-9	1
41	Benzoquinone, o-	C6H4O2	583-63-1	1
42	Benzoquinone, p-	C6H4O2	106-51-4	1
43	Benzoyl bromide	C7H5BrO	618-32-6	2
44	Benzyl 2-phenylacetate	C15H14O2	102-16-9	0.5
45	Benzyl acetate	C9H10O2	140-11-4	0.6
46	Benzyl alcohol	C7H8O	100-51-6	1
47	Benzyl chloride	C7H7Cl	100-44-7	0.7
48	Benzyl formate	C8H8O2	104-57-4	0.8
49	Benzyl isobutyrate	C11H14O2	103-28-6	0.5
50	Benzyl nitrile	C8H7N	140-29-4	1.4
51	Benzyl propionate	C10H12O2	122-63-4	0.8
52	Benzyltoluene, 4-	C14H14	620-83-7	0.7
53	Bio T Max			0.7
54	Biphenyl	C12H10	92-52-4	0.4
55	Bisclormethylether	C2H4Cl2O	542-88-1	6
56	Borneol	C10H18O	507-70-0	0.8
57	Bromine	Br2	7726-95-6	15
58	Bromo-2,2-dimethylpropane, 1-	C5H11Br	630-17-1	2
59	Bromo-2-chloroethane, 1-	C2H4BrCl	107-04-0	3.4

Index	Chemical name	Formula	CAS no.	10.6 eV
60	Bromo-2-methylpentane, 1-	C6H13Br	25346-33-2	2
61	Bromo-3,3,3-trifluoroprop-1-ene, 2-	C3H2BrF3	1514-82-5	2.7
62	Bromoacetone	C3H5BrO	598-31-2	1
63	Bromoacetylene	C2HBr	593-61-3	4
64	Bromobenzene	C6H5Br	108-86-1	0.32
65	Bromobutane, 1-	C4H9Br	109-65-9	1.6
66	Bromobutane, 2-	C4H9Br	78-76-2	0.97
67	Bromocyclohexane	C6H11Br	108-85-0	2
68	Bromoethane	C2H5Br	74-96-4	1.6
69	Bromoethanol, 2-	C2H5BrO	540-51-2	2
70	Bromoethyl methyl ether, 2-	C3H7OBr	6482-24-2	2.5
71	Bromoform	CHBr3	75-25-2	2.7
72	Bromopentane, 1-	C5H11Br	110-53-2	1.1
73	Bromopropane, 1-	C3H7Br	106-94-5	1.5
74	Bromopyridine, 3-	C5H4BrN	626-55-1	2
75	Bromopyridine, 4-	C5H4BrN	1120-87-2	2
76	Bromotrimethylsilane	C3H9BrSi	2857-97-8	1.9
77	But-2-ynal	C4H4O	1119-19-3	3
78	But-3-ynal	C4H4O	52844-23-2	1.5
79	Butadiene diepoxide, 1,3-	C4H6O2	1464-53-5	4
80	Butadiene, 1,2-	C4H6	590-19-2	1
81	Butadiene, 1,3-	C4H6	106-99-0	0.8
82	Butane, n-	C4H10	106-97-8	40
83	Butanediol, 2,3-	C4H10O2	513-85-9	5
84	Butanedione, 2,3-	C4H6O2	431-03-8	0.86
85	Butanoic acid	C4H8O2	107-92-6	4.3
86	Butanol, 1-	C4H10O	71-36-3	3.9
87	Butanol, 2-	C4H10O	78-92-2	3
88	Butanone oxime, 2-	C4H9NO	96-29-7	1
89	Buten-3-ol, 1-	C4H8O	598-32-3	1.8

Index	Chemical name	Formula	CAS no.	10.6 eV
90	Butene nitrile, 3-	C4H5N	109-75-1	3
91	Butene, 1-	C4H8	106-98-9	1.5
92	Butene, 2-	C4H8	107-01-7	1.3
93	Butene, cis-2-	C4H8	590-18-1	1.3
94	Butene, trans-2-	C4H8	624-64-6	1.3
95	Butenoic acid, 3-	C4H6O2	107-93-7	2
96	Butoxyethanol, 2-	C6H14O2	111-76-2	1.3
97	Butoxyethoxyethanol	C8H18O3	112-34-5	3
98	Butoxyethyl acetate, 2-	C8H16O3	112-07-2	2
99	Butyl acetate	C6H12O2	123-86-4	2.5
100	Butyl acetate, sec-	C6H12O2	105-46-4	1.8
101	Butyl acrylate	C7H12O2	141-32-2	1.3
102	Butyl butyrate	C8H16O2	109-21-7	1.53
103	Butyl chloroformate	C5H9ClO2	592-34-7	3.2
104	Butyl cyclohexan-1-ol, 4-tert-	C10H20O	98-52-2	1.4
105	Butyl cyclohexyl acetate, 2-tert-	C12H22O2	88-41-5	0.9
106	Butyl ether, n-	C8H18O	142-96-1	0.82
107	Butyl glycidyl ether	C7H14O2	2426-08-6	2
108	Butyl iodide	C4H9I	542-69-8	0.27
109	Butyl isocyanate	C5H9NO	111-36-4	2.5
110	Butyl lactate	C7H14O3	138-22-7	2.5
111	Butyl mercaptan, n-	C4H10S	109-79-5	0.8
112	Butyl mercaptan, tert-	C4H10S	75-66-1	0.62
113	Butyl methacrylate	C8H14O2	97-88-1	1.2
114	Butyl propionate, n-	C7H14O2	590-01-2	1.9
115	Butylbenzene	C10H14	104-51-8	0.6
116	Butylbenzene, sec-	C10H14	135-98-8	0.4
117	Butylbenzene, tert-	C10H14	98-06-6	0.4
118	Butyldiglycol acetate	C10H20O4	124-17-4	1.6
119	Butylene carbonate, 1,2-	C5H8O3	4437-85-8	18

Index	Chemical name	Formula	CAS no.	10.6 eV
120	Butylphenol, o-sec-	C10H14O	89-72-5	0.9
121	Butyn-2-one	C4H4O	1423-60-5	3
122	Butyraldehyde	C4H8O	123-72-8	1.7
123	Butyrolactone, gamma-	C4H6O2	96-48-0	15
124	Butyryl chloride	C4H7ClO	141-75-3	3
125	Camphene	C10H16	565-00-4	0.35
126	Camphor	C10H16O	76-22-2	0.4
127	Carbitol acetate	C6H16O4	112-15-2	1.6
128	Carbon disulfide	CS2	75-15-0	1.4
129	Carbon suboxide	C3O2	504-64-3	10
130	Carbon tetrabromide	CBr4	558-13-4	11
131	Carene	C10H16	13466-78-9	0.38
132	Carvacrol	C10H14O	499-75-2	0.8
133	Carvone, R-	C10H14O	6485-40-1	1.6
134	Caryophyllene	C15H24	13877-93-5	0.4
135	Chloramine	ClH2N	10599-90-3	2
136	Chloro-1,1-difluoroethene, 2-	C2HClF2	359-10-4	1.5
137	Chloro-2-propanone, 1-	C3H5ClO	78-95-5	1
138	Chloro-3-methylphenol,4-	C7H7ClO	59-50-7	1
139	Chloroacetaldehyde	C2H3OCl	107-20-0	3
140	Chlorobenzene	C6H5Cl	108-90-7	0.45
141	Chlorobenzotrifluoride, 4-	C7H4ClF3	98-56-6	1.5
142	Chlorobutane, 1-	C4H9Cl	109-69-3	10
143	Chlorobutane, 2-	C4H9Cl	78-86-4	5.8
144	Chlorocyclohexane	C6H11Cl	542-18-7	2
145	Chloroethanol, 2-	C2H5ClO	107-07-3	10
146	Chloroethyl methyl ether, 2-	C3H7ClO	627-42-9	2.6
147	Chloromethoxyethane	C3H7ClO	3188-13-4	4
148	Chloropentane, 1-	C5H11Cl	543-59-9	5
149	Chloroprene	C4H5Cl	126-99-8	1.3

Index	Chemical name	Formula	CAS no.	10.6 eV
150	Chloropyridine, 2-	C5H4ClN	109-09-1	1
151	Chlorostyrene, o-	C8H7Cl	2039-87-4	0.4
152	Chlorothiophene, 3-	C4H3ClS	17249-80-8	0.7
153	Chlorotoluene, m-	C7H7Cl	108-41-8	0.5
154	Chlorotoluene, o-	C7H7Cl	95-49-8	0.5
155	Chlorotoluene, p-	C7H7Cl	106-43-4	0.4
156	Chlorotrifluoroethylene	C2ClF3	79-38-9	1
157	Cinnamic aldehyde	C8H8O	104-55-2	0.4
158	Cinnamyl acetate	C11H12O2	21040-45-9	0.4
159	Cinnamyl alcohol	C9H10O	104-54-1	0.4
160	Citral	C10H16O	5392-40-5	1.7
161	Citronellal	C10H18O	106-23-0	0.9
162	Citronellol	C10H20O	26489-01-0	1
163	Citronellol acetate	C12H22O2	150-84-5	1.5
164	Citronellol formate	C11H20O2	105-85-1	1.5
165	Citronellyl isobutyrate	C14H26O2	97-89-2	0.9
166	Clary propyl acetate	C11H20O3	131766-73-9	1.2
167	Coumarin	C9H6O2	91-64-5	0.4
168	Creosote	N/A	8021-39-4	1
169	Cresol, m-	C7H8O	108-39-4	1.4
170	Cresol, o-	C7H8O	95-48-7	1.4
171	Cresol, p-	C7H8O	106-44-5	1.5
172	Cresyl acetate, p-	C9H10O2	140-39-6	1
173	Cresyl ethyl ether, p-	C9H12O	622-60-6	0.8
174	Cresyl methyl ether	C8H10O	104-93-8	0.8
175	Crotonaldehyde	C4H6O	4170-30-3	1
176	Crotonyl alcohol	C4H8O	6117-91-5	0.8
177	Cycloalkanes	N/A	N/A	1.5
178	Cyclobutanone	C4H6O	1191-95-3	1.12
179	Cyclobutene	C4H6	822-35-5	3

Index	Chemical name	Formula	CAS no.	10.6 eV
180	Cycloheptane	C7H14	291-64-5	1.1
181	Cyclohex-2-enedione, 1,4-	C6H6O2	4505-38-8	1
182	Cyclohexane	C6H12	110-82-7	1.3
183	Cyclohexanethiol	C6H12S	1569-69-3	0.5
184	Cyclohexanol	C6H12O	108-93-0	1.6
185	Cyclohexanone	C6H10O	108-94-1	1
186	Cyclohexene	C6H10	110-83-8	0.9
187	Cyclohexyl acetate	C8H14O2	622-45-7	1.2
188	Cyclooctadiene	C8H12	29965-97-7	1
189	Cyclopentadiene	C5H6	542-92-7	0.8
190	Cyclopentanone	C5H8O	120-92-3	0.9
191	Cyclopentene	C5H8	142-29-0	1.5
192	Cyclopentene-1,3-dione, 4-	C5H4O2	930-60-9	1
193	Cymene, p-	C10H14	99-87-6	0.4
194	Decahydronaphthalene	C10H18	91-17-8	0.9
195	Decanal	C10H20O	112-31-2	1.2
196	Decane	C10H22	124-18-5	1.2
197	Decamethylcyclopentasiloxane	C10H30O5Si5	541-02-6	0.2
198	Decenal, trans-4-	C10H18O	65405-70-1	1.4
199	Decene	C10H22	872-05-9	0.8
200	Decyne, 1-	C10H18	764-93-2	0.43
201	Diacetone alcohol	C6H12O2	123-42-2	0.9
202	Diazine, 1,2-	C4H4N2	289-80-5	3
203	Diazine, 1,3-	C4H4N2	289-95-2	3
204	Dibromoacetylene	C2Br2	624-61-3	2
205	Dibromochloromethane	CHBr2Cl	124-48-1	10
206	Dibromocyclohexane, 1,2-	C6H10Br2	5401-62-7	3
207	Dibromocyclopentane	C5H8Br2	33547-17-0	3
208	Dibromodichloromethane	CBr2Cl2	594-18-3	4
209	Dibromodifluoromethane	CF2Br2	75-61-6	3

Index	Chemical name	Formula	CAS no.	10.6 eV
210	Dibromoethane, 1,2-	C2H4Br2	106-93-4	2
211	Dibromoethene, 1,1-	C2H2Br2	593-92-0	1.5
212	Dibromoethene, 1,2-	C2H2Br2	540-49-8	1.5
213	Dibromomethane	CH2Br2	74-95-3	1.9
214	Dibutyl fumarate	C12H20O4	105-75-9	1.5
215	Dichloro-1,2-difluoroethene, 1,2-	C2Cl2F2	598-88-9	2
216	Dichloro-1,3-butadiene, 1,4-	C4H6Cl2	2984-42-1	0.6
217	Dichloro-1-propene, 2,3-	C3H4Cl2	78-88-6	1.4
218	Dichloro-2,2,-difluoroethene, 1,1-	C2Cl2F2	79-35-6	1
219	Dichloro-2-butene, 1,4-	C4H7Cl	764-41-0	2
220	Dichloro-2-butene, trans-1,4-	C4H7Cl	110-57-6	2
221	Dichloro-2-octyl-isothiazolone, 4,5-	C11H17Cl2NOS	64359-81-5	1
222	Dichloroacetic acid	C2H2Cl2O2	79-43-6	20
223	Dichloroacetylene	C2Cl2	7572-29-4	5
224	Dichlorobenzene, m-	C6H4Cl2	541-73-1	0.5
225	Dichlorobenzene, o-	C6H4Cl2	95-50-1	0.6
226	Dichlorobenzene, p-	C6H4Cl2	106-46-7	0.5
227	Dichloroethene, 1,1-	C2H2Cl2	75-35-4	1
228	Dichloroethene, 1,2-	C2H2Cl2	540-59-0	0.4
229	Dichloroethene, cis-1,2-	C2H2Cl2	156-59-2	0.8
230	Dichloroethene, trans-1,2-	C2H2Cl2	156-60-5	0.4
231	Dichlorophenol, 2,6-	C6H4Cl2O	87-65-0	0.9
232	Dichloropropene, 1,3-	C3H4Cl2	542-75-6	1.4
233	Dichlorovinyl dimethyl phosphate, 2,2-	C4H7Cl2O4P	62-73-7	3
234	Dicyclopentadiene	C10H12	77-73-6	0.65
235	Diesel fuel		68334-30-5	0.8
236	Diethoxymethane	C5H12O2	462-95-3	1
237	Diethyl benzene	C10H14	25340-17-4	0.5
238	Diethyl carbonate	C5H10O3	105-58-8	7
239	Diethyl ether	C4H10O	60-29-7	1.5

Index	Chemical name	Formula	CAS no.	10.6 eV
240	Diethyl maleate	C8H12O4	141-05-9	2
241	Diethyl malonate	C7H12O4	105-53-3	4
242	Diethyl phosphite	C4H11O3P	762-04-9	2
243	Diethyl phthalate	C12H14O4	84-66-2	1
244	Diethyl sulfate	C4H10SO4	64-67-5	20
245	Diethyl sulfide	C4H10S	352-93-2	0.8
246	Diethyl sulfone	C4H10O2S	597-35-3	2
247	Diethylacetic acid	C6H12O2	88-09-5	7
248	Diethylacetylene	C6H10	928-49-4	2
249	Diethylbenzene,1,2-	C10H14	135-01-3	0.5
250	Diethylbenzene, 1,4-	C10H14	105-05-5	0.6
251	Diethylene glycol	C4H10O3	111-46-6	15
252	Diethylene glycol monoethyl ether	C6H14O3	111-90-0	1.5
253	Diethylsilane	C4H12Si	542-91-6	2
254	Diglycidyl ether	C6H10O3	2238-07-5	3
255	Dihydroeugenol	C10H14O2	2785-87-7	0.4
256	Dihydrojasmone	C11H18O	1128-08-1	0.6
257	Dihydromyrcenol	C10H20O	18479-58-8	0.8
258	Dihydroxybenzene, 1,2-	C6H6O2	120-80-9	1
259	Dihydroxybenzene, 1,3-	C6H6O2	108-46-3	1
260	Diiodomethane	CH2I2	75-11-6	1.2
261	Diisobutyl ketone	C9H18O	108-83-8	0.8
262	Diisobutylene	C8H16	107-39-1	0.7
263	Diisopropyl ether	C6H14O	108-20-3	0.7
264	Diisopropylbenzene	C12H18	25321-09-9	0.5
265	Diketene	C4H4O2	674-82-8	2.2
266	Dimethoxybenzene, 1,4-	C8H10O2	150-78-7	1.3
267	Dimethoxyethane, 1,2-	C4H10O2	110-71-4	0.9
268	Dimethoxymethane	C3H8O2	109-87-5	2.8
269	Dimethyl adipate	C8H14O4	627-93-0	2

Index	Chemical name	Formula	CAS no.	10.6 eV
270	Dimethyl carbonate	C3H6O3	616-38-6	60
271	Dimethyl chlorothiophosphate	C2H6ClO2PS	2524-03-0	1
272	Dimethyl disulfide	C2H6S2	624-92-0	0.2
273	Dimethyl ether	C2H6O	115-10-6	1.3
274	Dimethyl glutarate	C7H12O4	1119-40-0	5
275	Dimethyl hydrogen phosphite	C2H7O3P	868-85-9	8
276	Dimethyl phthalate	C10H10O4	131-11-3	1
277	Dimethyl succinate	C6H10O4	106-65-0	3
278	Dimethylacetamide N,N-	C4H9NO	127-19-5	1.3
279	Dimethylacetylene	C4H6	503-17-3	0.19
280	Dimethylaminoethane, N,N-	C2H8N2	57-14-7	1
281	Dimethylboron bromide	C2H6BBr	5158-50-9	4
282	Dimethylbutene, 2,3-	C6H12	563-78-0	0.8
283	Dimethylbutyl acetate, 1,3-	C8H16O2	108-84-9	1.6
284	Dimethylcycloheptane, 1,2-	C9H18	13151-50-3	1.3
285	Dimethylcyclohexane,1,2-	C8H16	583-57-3	0.55
286	Dimethylcyclopentane	C7H14	1192-18-3	1.2
287	Dimethylformamide	C3H7NO	68-12-2	1.3
288	Dimethylmethylphosphonate	C3H9O3P	756-79-6	5
289	Dimethyloctanoic acid,4,6-	C10H20O2	2553-96-0	1.5
290	Dimethyloctan-1-ol, 3,7-	C10H22O	106-21-8	1.2
291	Dimethyloctan-3-ol, 3,7-	C10H22O	78-69-3	1.2
292	Dimethylpentane, 2,4-	C7H16	108-08-7	1
293	Dimethylpyrazine, 2,5-	C6H8N2	123-32-0	1
294	Dimethylsilane	C2H8Si	1111-74-6	2
295	Dioxane, 1,4-	C4H8O2	123-91-1	1.45
296	Dioxolane	C3H6O2	646-06-0	2.7
297	Diphenyl ether	C12H10O	101-84-8	1.5
298	Dipropyl ether	C6H14O	111-43-3	1.04
299	Dipropylene glycol	C6H14O3	110-98-5	4

Index	Chemical name	Formula	CAS no.	10.6 eV
300	Disilane	Si2H6	1590-87-0	2
301	Distillates (petroleum), hydrotreated light naphthenic		64742-53-6	1
302	Distillates (petroleum), hydrotreated light paraffinic		64742-55-8	1
303	Disulfur dibromide	S2Br2	13172-31-1	1.5
304	Disulfur dichloride	S2Cl2	10025-67-9	3
305	Di-tert-butyl-p-cresol	C15H24O	128-37-0	0.3
306	Di-tert-butylphenol,2,4-	C14H22O	96-76-4	1
307	Divinylbenzene, 1,3-	C10H10	108-57-6	0.6
308	Dodecene	C12H24	112-40-3	1
309	Endo-tetrahydrodicyclopentadiene	C10H16	6004-38-2	1
310	Epichlorohydrin	C3H5ClO	106-89-8	5.3
311	Epoxybutane,1,2	C4H8O	106-88-7	4
312	Epoxypropyl isopropyl ether, 2,3-	C6H12O2	4016-14-2	1.2
313	Estragole	C10H12O	140-67-0	0.7
314	Ethanol	C2H6O	64-17-5	11
315	Ethoxy-2-methylpropane, 1-	C6H14O	627-02-1	1
316	Ethoxy-2-propanol, 1-	C5H12O2	1569-02-4	1.2
317	Ethoxybutane, 2-	C6H14O	19316-73-5	1
318	Ethoxyethanol, 2-	C4H10O2	110-80-5	2
319	Ethoxypropane,1-	C5H12O	628-32-0	1.2
320	Ethoxypropanol	C5H12O2	52125-53-8	1.2
321	Ethyl 2,2,2-trifluoroethyl ether	C4H7F3O	461-24-5	5
322	Ethyl 2-methylbutyrate	C7H14O2	7452-79-1	1.4
323	Ethyl acetate	C4H8O2	141-78-6	4.5
324	Ethyl acetoacetate	C6H10O3	141-97-9	2.5
325	Ethyl acrylate	C5H8O2	140-88-5	2.3
326	Ethyl benzoate	C9H10O2	93-89-0	0.9
327	Ethyl butyrate	C6H12O2	105-54-4	1.4
328	Ethyl chloroformate	C3H5O2Cl	541-41-3	80
329	Ethyl cyanoacrylate	C6H7O2N	7085-85-0	1.5

Index	Chemical name	Formula	CAS no.	10.6 eV
330	Ethyl decanoate	C12H24O2	110-38-3	1.4
331	Ethyl formate	C3H6O2	109-94-4	35
332	Ethyl hexanoate	C8H16O2	123-66-0	1.6
333	Ethyl hexanol, 2-	C8H18O	104-76-7	1.5
334	Ethyl iodide	C2H5I	75-03-6	0.3
335	Ethyl isopropyl ketone	C6H12O	565-69-5	0.8
336	Ethyl lactate	C5H10O3	97-64-3	2.1
337	Ethyl mercaptan	C2H6S	75-08-1	0.6
338	Ethyl methacrylate	C6H10O2	97-63-2	1.06
339	Ethyl methyl carbonate	C4H8O3	623-53-0	18
340	Ethyl octanoate	C10H20O2	106-32-1	2
341	Ethyl phenylacetate	C10H12O2	101-97-3	1.2
342	Ethyl propanoate	C5H10O2	105-37-3	2.5
343	Ethyl tert-butyl ether	C6H14O	637-92-3	0.8
344	Ethyl-2-methylbenzene, 1-	C9H12	611-14-3	0.5
345	Ethyl-3-ethoxypropionate	C7H14O3	763-69-9	3
346	Ethylacetylene	C4H6	107-00-6	0.2
347	Ethylbenzene	C8H10	100-41-4	0.56
348	Ethylbenzyl chloride	C9H11Cl	26968-58-1	1.5
349	Ethylcyclohexane	C8H16	1678-91-7	0.8
350	Ethylene	C2H4	74-85-1	9
351	Ethylene glycol	C2H6O2	107-21-1	9
352	Ethylene glycol diacetate	C6H10O4	111-55-7	4
353	Ethylene glycol monopropyl ether	C5H12O2	2807-30-9	3
354	Ethylene oxide	C2H4O	75-21-8	9
355	Ethylhexanal, 2-	C8H16O	123-05-7	1.5
356	Ethylhexanoic acid, 2-	C8H16O2	149-57-5	5
357	Ethylhexenal, 2-	C8H14O	645-62-5	1.3
358	Ethylhexyl acrylate, 2-	C11H20O2	103-11-7	1
359	Ethylidene-2-norbornene, 5-	C9H12	16219-75-3	0.6

Index	Chemical name	Formula	CAS no.	10.6 eV
360	Ethylisocyanate	C3H5NO	109-90-0	4
361	Ethyltoluene, 3-	C9H12	620-14-4	0.6
362	Ethyltoluene, 4-	C9H12	622-96-8	0.6
363	Eucalyptol	C10H18O	470-82-6	0.6
364	Eugenol methyl ether	C11H14O2	93-15-2	0.4
365	Exo-tetrahydrodicyclopentadiene	C10H16	2825-82-3	1
366	Fenchol	C10H18O	1632-73-1	0.4
367	Ferrocene	C10H10Fe	102-54-5	0.8
368	Fluorobenzene	C6H5F	462-06-6	0.74
369	Fluorobenzoic acid, 4-	C7H5FO2	456-22-4	2
370	Formamide	CH3ON	75-12-7	2
371	Furan	C4H4O	110-00-9	0.4
372	Furfural	C5H4O2	98-01-1	1.1
373	Furfuryl alcohol	C5H6O2	98-00-0	2
374	Furfuryl mercaptan	C5H6OS	98-02-2	0.8
375	Gasoline		8006-61-9	0.9
376	Geranial	C10H16O	141-27-5	0.6
377	Geraniol	C10H18O	106-24-1	0.7
378	Geranyl acetate	C12H20O2	105-87-3	1.2
379	Germane	GeH4	7782-65-2	10
380	Glutaraldehyde	C5H8O2	111-30-8	5
381	Glycidyl methacrylate	C7H10O3	106-91-2	1.2
382	Glycolaldehyde	C2H4O2	141-46-8	5
383	Guaiacol	C7H8O2	90-05-1	0.8
384	Heptan-2-one	C7H14O	110-43-0	0.85
385	Heptan-3-one	C7H14O	106-35-4	0.73
386	Heptan-4-one	C7H14O	123-19-3	0.9
387	Heptane	C7H16	142-82-5	2.2
388	Heptanoic acid	C7H14O2	111-14-8	5
389	Heptanol	C7H16O	111-70-6	1.7

Index	Chemical name	Formula	CAS no.	10.6 eV
390	Heptene, 1-	C7H14	592-76-7	0.88
391	Heptylcyclopentan-1-one, 2-	C12H22O	137-03-1	0.8
392	Heptyne, 1-	C7H12	628-71-7	2
393	Hex-1-en-3-ol	C6H12O	4798-44-1	0.9
394	Hexachlorodisilane	Cl6Si2	13465-77-5	8
395	Hexafluorobenzene	C6F6	392-56-3	2
396	Hexamethyl cyclotrisiloxane	C6H18O3Si3	541-05-9	0.3
397	Hexamethyldisilazane, 1,1,1,3,3,3-.	C6H18NSi2	999-97-3	0.45
398	Hexamethyldisiloxane	C6H18OSi2	107-46-0	0.31
399	Hexamethylene diisocyanate	C8H12N2O2	822-06-0	1.5
400	Hexan-2-one	C6H12O	591-78-6	0.8
401	Hexane	C6H14	110-54-3	4
402	Hexane-1,6-diol	C6H14O2	629-11-8	3
403	Hexanoic acid	C6H12O2	142-62-1	4
404	Hexanol	C6H14O	111-27-3	2
405	Hexenal, cis-3-	C6H10O	6789-80-6	1
406	Hexene, 1-	C6H12	592-41-6	0.98
407	Hexenenitrile, 5-	C6H9N	5048-19-1	2
408	Hexenyl acetate, cis-3-	C8H14O2	3681-71-8	1
409	Hexenyl butyrate, cis-3-	C10H18O2	16491-36-4	1.5
410	Hexylaldehyde	C6H12O	66-25-1	1.2
411	Hydrazine	H4N2	302-01-2	3
412	Hydrocarbons, C10, aromatics, >1% naphthalene		EC No 919-284-0	0.4
413	Hydrogen iodide	HI	10034-85-2	5
414	Hydrogen selenide	H2Se	7783-07-5	2
415	Hydrogen sulfide	H2S	7783-06-4	4
416	Hydrogen telluride	H2Te	7783-09-7	1.5
417	Hydroxy-2-methylpropiophenone, 2-	C10H12O2	7473-98-5	1
418	Hydroxybutanal, 3-	C4H6O2	107-89-1	2
419	Hydroxycitronellal	C10H20O2	107-75-5	1

Index	Chemical name	Formula	CAS no.	10.6 eV
420	Hydroxyethyl acrylate	C5H8O3	818-61-1	1.2
421	Hydroxylamine	H3NO	7803-49-8	2
422	Hydroxypropyl acrylate, 2-	C6H10O3	999-61-1	1.5
423	Indole	C8H7N	120-72-9	0.4
424	Iodine	I2	7553-56-2	0.18
425	Iodobenzene	C6H5I	591-50-4	0.2
426	Iodoethene	C2H3I	593-66-8	1.2
427	Iodoform	CHI3	75-47-8	1.5
428	Iodomethane	CH3I	74-88-4	0.4
429	Isoalkanes, C10-C13	C8H18O	68551-17-7	1
430	Isoamyl acetate	C7H14O2	123-92-2	1.5
431	Isoamyl salicilate	C12H16O3	87-20-7	1
432	Isoamylene, beta-	C5H10	513-35-9	0.82
433	Isobornyl acetate	C12H20O2	125-12-2	0.5
434	Isobornyl acrylate	C13H20O2	5888-33-5	3
435	Isobutane	C4H10	75-28-5	8
436	Isobutanol	C4H10O	78-83-1	3
437	Isobutyl acetate	C6H12O2	110-19-0	2
438	Isobutyl acrylate	C7H12O2	106-63-8	1.2
439	Isobutyl chloroformate	C5H9ClO2	543-27-1	10
440	Isobutylbenzene	C10H14	538-93-2	0.4
441	Isobutylene	C4H8	115-11-7	1
442	Isobutylene epoxide	C4H8O	558-30-5	3
443	Isobutyraldehyde	C4H8O	78-84-2	1.38
444	Isobutyric acid	C4H8O2	79-31-2	4.4
445	Isodecanol	C10H22O	25339-17-7	0.9
446	Isodihydrolavandulal	C10H18O	35158-25-9	0.72
447	Isoeugenol	C10H12O2	97-54-1	0.4
448	Isoheptane	C7H16	591-76-4	1.2
449	Isojasmone	C11H18O	95-41-0	0.7

Index	Chemical name	Formula	CAS no.	10.6 eV
450	Isomenthone	C10H18O	1196-31-2	0.6
451	Isononanal	C9H18O	35127-50-5	0.9
452	Isononanol	C9H20O	27458-94-2	1.5
453	Isooctane	C8H18	540-84-1	1.1
454	Isooctanol	C8H18O	26952-21-6	1.7
455	Isopentane	C5H12	78-78-4	5
456	Isopentanol	C5H12O	137-32-6	2
457	Isopentene	C5H10	563-45-1	0.8
458	Isophorone	C9H14O	78-59-1	0.8
459	Isoprene	C5H8	78-79-5	0.9
460	Isopropanol	C3H8O	67-63-0	4
461	Isopropoxyethanol, 2-	C5H12O2	109-59-1	1.2
462	Isopropoxyethyl acetate, 2-	C7H14O2	19234-20-9	1.2
463	Isopropyl acetate	C5H10O2	108-21-4	2.4
464	Isopropyl chloroformate	C4H7O2Cl	108-23-6	1.6
465	Isopropyl mercaptan	C3H8S	75-33-2	0.56
466	Isopropyl nitrite	C3H7NO2	541-42-4	4
467	Isopropylaminoethanol, 2-	C5H13NO	109-56-8	2
468	Isopropylcyclohexane	C9H18	696-29-7	0.7
469	Isothiazole	C3H3NS	288-16-4	3
470	Isovaleraldehyde	C5H10O	590-86-3	1.3
471	Isovaleric Acid	C5H10O2	503-74-2	5.5
472	Isoxazole	C3H3NO	288-14-2	1
473	Jasmal	C11H22O3	1322-17-4	1.4
474	Jasmone, cis-	C11H16O	488-10-8	0.5
475	Jet Fuel Jp-4			0.8
476	Jet Fuel Jp-5			0.7
477	Jet Fuel Jp-8			0.7
478	Kerosene		8008-20-6	0.8
479	Ketene	C2H2O	463-51-4	3

Index	Chemical name	Formula	CAS no.	10.6 eV
480	Linalool oxide	C10H18O2	14049-11-7	0.6
481	Linalyl acetate	C12H20O2	115-95-7	1.1
482	Liquefied petroleum gas		68476-85-7	40
483	Maleic anhydride	C4H2O3	108-31-6	2
484	Menthol	C10H20O	1490-04-6	0.9
485	Menthone	C10H18O	89-80-5	0.4
486	Mercaptoacetic acid	C2H4O2S	68-11-1	1
487	Metaldehyde	C8H16O4	108-62-3	10
488	Methacrolein	C4H6O	78-85-3	1.5
489	Methacrylamide	C4H7NO	79-39-0	2
490	Methacrylic acid	C4H6O2	79-41-4	2.3
491	Methacrylonitrile	C4H5N	126-98-7	5
492	Methoxy-1-butanol, 3-	C5H12O2	2517-43-3	3
493	Methoxy-1-propanol, 2-	C4H10O2	1589-47-5	2
494	Methoxy-2-butene,2-	C5H10O	6380-95-6	0.8
495	Methoxy-2,2-dimethylpropane	C6H14O	1118-00-9	0.9
496	Methoxybutyl acetate, 3-	C7H14O3	4435-53-4	2
497	Methoxyethane	C3H8O	540-67-0	1
498	Methoxyethanol, 2-	C3H8O2	109-86-4	3
499	Methoxyethene	C3H6O	107-25-5	1
500	Methoxyethoxyethanol, 2-	C5H12O3	111-77-3	1.4
501	Methoxyethyl acetate, 2-	C5H10O3	110-49-6	5
502	Methoxyethyl ether, 2-	C6H14O3	111-96-6	1
503	Methoxymethylethoxy-2-propanol	C7H16O3	34590-94-8	1.3
504	Methoxypropan-2-ol, 1-	C4H10O2	107-98-2	1.6
505	Methoxypropane, 2-	C4H10O	598-53-8	1.17
506	Methoxypropyl acetate	C6H12O3	108-65-6	1.6
507	Methoxypyridine, 3-	C6H7NO	7295-76-3	1
508	Methyl 10-undecenoate	C12H22O2	111-81-9	2
509	Methyl-2-butenenitrile, 3-	C5H7N	4786-24-7	2

Index	Chemical name	Formula	CAS no.	10.6 eV
510	Methyl 2-methylpropanoate	C5H10O2	547-63-7	2
511	Methyl 3-mercaptopropionate	C4H8O2S	2935-90-2	1
512	Methyl acetate	C3H6O2	79-20-9	7
513	Methyl acetoacetate	C5H8O3	105-45-3	3
514	Methyl acrylate	C4H6O2	96-33-3	3.6
515	Methyl anthranilate	C8H9NO2	134-20-3	0.4
516	Methyl benzoate	C8H8O2	93-58-3	1.2
517	Methyl bromide	CH3Br	74-83-9	1.9
518	Methylbutyl Acetate, 2-	C7H14O2	624-41-9	1.2
519	Methyl, N- diaminopropane, 1,3-	C4H12N2	6291-84-5	1
520	Methyl dimethylacrylate	C6H10O2	924-50-5	2.5
521	Methyl ethyl ketone	C4H8O	78-93-3	0.96
522	Methyl ethyl ketone peroxides	C8H18O6	1338-23-4	0.8
523	Methyl Ethyl Sulfide	C3H8S	624-89-5	0.8
524	Methyl heptyne carbonate	C9H14O2	111-12-6	1.3
525	Methyl hexanoate	C7H14O2	106-70-7	1
526	Methyl ionone	C14H22O	1335-46-2	0.4
527	Methyl isobutyl ketone	C6H12O	108-10-1	0.9
528	Methyl isocyanate	C2H3NO	624-83-9	5
529	Methyl isopropyl ketone	C5H10O	563-80-4	0.99
530	Methyl isothiocyanate	C2H3NS	556-61-6	0.6
531	Methyl mercaptan	CH4S	74-93-1	0.7
532	Methyl methacrylate	C5H8O2	80-62-6	1.31
533	Methyl phenylacetate	C9H10O2	101-41-7	0.4
534	Methyl propargyl ether	C4H6O	627-41-8	2
535	Methyl propionate	C4H8O2	554-12-1	3.8
536	Methyl propynoate	C4H4O2	922-67-8	10
537	Methyl salicylate	C8H8O3	119-36-8	0.8
538	Methyl sulfide	C2H6S	75-18-3	0.8
539	Methyl tert-butyl ether	C5H12O	1634-04-4	1

Index	Chemical name	Formula	CAS no.	10.6 eV
540	Methyl thiocyanate	C2H3NS	556-64-9	2.2
541	Methyl vinyl ketone	C4H6O	78-94-4	0.6
542	Methyl-1-butene, 2-	C5H10	563-46-2	0.8
543	Methyl-1-butene, 3-	C5H10	563-45-1	0.8
544	Methyl-2-butanol, 3-	C5H12O	598-75-4	3.3
545	Methyl-2-butenal, 3-	C5H8O	107-86-8	1
546	Methyl-2-hexenoic acid, trans-3-	C7H12O2	27960-21-0	1.5
547	Dimethyl 2-methylglutarate	C8H14O4	14035-94-0	4
548	Methyl-2-propen-1-ol, 2-	C4H8O	513-42-8	1.3
549	Methyl-2-pyrrolidinone, N-	C5H9NO	872-50-4	0.9
550	Methyl-5-hepten-2-one, 6-	C8H14O	110-93-0	0.63
551	Methylbutan-1-ol, 3-	C5H12O	123-51-3	2.3
552	Methylbutanal, 2-	C5H10O	96-17-3	1.2
553	Methylbutyric acid, 2-	C5H10O2	116-53-0	6
554	Methylcyclohexane	C7H14	108-87-2	1.1
555	Methylcyclohexanol	C7H14O	25639-42-3	2.4
556	Methylcyclohexanol, 4-	C7H14O	589-91-3	2.4
557	Methylcyclohexanone, 2-	C7H12O	583-60-8	1
558	Methylcyclopentane	C6H12	96-37-7	2.5
559	Methylcyclopentane-1,2-dione, 3-	C6H8O2	765-70-8	1
560	Methylcyclopentene, 1-	C6H10	693-89-0	1.5
561	Methylenepentane, 3-	C6H12	760-21-4	0.9
562	Methylfurfural, 5-	C6H6O2	620-02-0	1
563	Methylheptan-3-one, 5-	C8H16O	541-85-5	0.77
564	Methylhexan-2-one, 5-	C7H14O	110-12-3	0.7
565	Methylhydrazine	CH6N2	60-34-4	1.3
566	Methylmorpholine, N-	C5H11NO	109-02-4	1.2
567	Methylnaphthalene, 2-	C11H10	91-57-6	0.5
568	Methylolacrylamide, N-	C4H7NO2	924-42-5	2
569	Methylpent-3-en-2-one, 4-	C6H10O	141-79-7	0.6

Index	Chemical name	Formula	CAS no.	10.6 eV
570	Methylpentan-2-ol, 4-	C6H14O	108-11-2	1.4
571	Methylpentane, 2-	C6H14	107-83-5	3
572	Methylpentane, 3-	C6H14	96-14-0	2.5
573	Methylpentane-2,4-diol, 2-	C6H14O2	107-41-5	4
574	Methylpropanoyl chloride, 2-	C4H7ClO	79-30-1	8
575	Methylcyclopropene, 1-	C4H6	3100-04-7	4
576	Methylpyrrole, N-	C5H7N	96-54-8	0.9
577	Methylstyrene	C9H10	25013-15-4	0.57
578	Methyltetrahydrofuran, 2-	C5H10O	96-47-9	2
579	Methylthiopropional, 3-	C4H8OS	3268-49-3	2
580	Methyltris(trimethylsiloxy)silane	C10H30O3Si4	17928-28-8	0.2
581	Methylundecanal, 2-	C12H24O	110-41-8	1
582	Mineral oil		8042-47-5	0.8
583	Mineral spirits		64475-85-0	0.57
584	Monoisobutanolamine	C4H11NO	124-68-5	1.6
585	Myrcene	C10H16	123-35-3	0.49
586	Naphtha, heavy aromatic		64742-94-5	0.4
587	Naphtha, hydrotrated heavy	CnH(2n+2)	64742-48-9	1
588	Naphtha, hydrodesulfurized heavy		64742-82-1	1
589	Naphtha, light aromatic		64742-95-6	0.45
590	Naphtha, medium aliphatic		64742-88-7	0.8
591	Naphthalene	C10H8	91-20-3	0.63
592	Naphthol methyl ether, 2-	C11H10O	93-04-9	0.5
593	Neopentane	C5H12	463-82-1	3
594	Neopentyl alcohol	C5H12O	75-84-3	2
595	Nitric oxide	NO	10102-43-9	8
596	Nitrobenzene	C6H5NO2	98-95-3	1.7
597	Nitrogen dioxide	NO2	10102-44-0	13
598	Nonanal	C9H18O	124-19-6	1.3
599	Nonane	C9H20	111-84-2	1.4

Index	Chemical name	Formula	CAS no.	10.6 eV
600	Nonanol (mixed isomers)	C9H20O	143-08-8	1.2
601	Nonene (mixed isomers)	C9H18	27215-95-8	0.6
602	Nonene, 1-	C9H18	124-11-8	0.6
603	Norbornadiene, 2,5-	C7H8	121-46-0	0.6
604	Octadiene, 2,4-	C8H14	13643-08-8	0.6
605	Octalactone, gamma-	C8H14O	104-50-7	3
606	Octamethylcyclotetrasiloxane	C6H12O4Si4	556-67-2	0.3
607	Octamethyltrisiloxane	C8H24O2Si3	107-51-7	0.26
608	Octanal	C8H16O	124-13-0	1.1
609	Octane	C8H18	111-65-9	1.6
610	Octanethiol, 1-	C8H18S	111-88-6	0.8
611	Octanol	C8H18O	111-87-5	1.6
612	Octene (mixed isomers)	C8H16	25377-83-7	0.7
613	Octene, 1-	C8H16	111-66-0	0.7
614	Oxalyl bromide	C2Br2O2	15219-34-8	5
615	Paraffin wax, fume		8002-74-2	1
616	Paraffins, normal		64771-72-8	1
617	Paraldehyde	C6H12O3	123-63-7	2.2
618	Pentacarbonyl iron	FeC5O5	13463-40-6	1
619	Pentan-2-one	C5H10O	107-87-9	0.99
620	Pentan-3-one	C5H10O	96-22-0	0.77
621	Pentanal	C5H10O	110-62-3	1.5
622	Pentandione, 2,4-	C5H8O2	123-54-6	1.2
623	Pentane	C5H12	109-66-0	7
624	Pentanoic acid	C5H10O2	109-52-4	8
625	Pentanol, 2-	C5H12O	6032-29-7	2
626	Pentanol, 3-	C5H12O	584-02-1	1.7
627	Pentene, 1-	C5H10	109-67-1	0.92
628	Pentene, cis-2-	C5H10	627-20-3	0.9
629	Pentene, trans-2-	C5H10	646-04-8	0.9

Index	Chemical name	Formula	CAS no.	10.6 eV
630	Pentylcyclopentan-1-one, 2-	C10H18O	4819-67-4	1
631	Pentylcyclopentane	C10H20	3741-00-2	1.1
632	Pentyne, 1-	C5H8	627-19-0	3
633	Perfluorobutadiene	C4F6	685-63-2	3
634	Perfluoro-tert-butylamine	C4H2F9N	2809-92-9	5
635	Petroleum Distillates Light			1.2
636	Petroleum Distillates Heavy			1
637	Petroleum Distillates, Hydrotreated Light		64742-47-8	1
638	Petroleum ether		8032-32-4	0.9
639	Phellandrene	C10H16	99-83-2	0.8
640	Phenethyl methyl ether, 2-	C9H12O	3558-60-9	0.6
641	Phenol	C6H6O	108-95-2	0.9
642	Phenoxyethyl acrylate, 2-	C11H12O3	48145-04-6	1.5
643	Phenyl chloroformate	C7H5ClO2	1885-14-9	1.1
644	Phenyl propene, 2-	C9H10	98-83-9	0.4
645	Phenyl-2,3-epoxypropyl ether	C9H10O2	122-60-1	0.8
646	Phenylacetaldehyde	C8H8O	122-78-1	0.7
647	Phenylacetic acid	C8H8O2	103-82-2	1
648	Phenylcyclohexane	C12H16	827-52-1	0.4
649	Phenylethanol, 2-	C8H10O	60-12-8	1.2
650	Phenylethyl acetate, 1-	C10H12O2	93-92-5	0.7
651	Phenylethyl isobutyrate, 2-	C12H16O2	103-48-0	1.5
652	Phenylpropane, 2-	C9H12	98-82-8	0.6
653	Phosphine	PH3	7803-51-2	2
654	Phthalic Anhydride	C8H4O3	85-44-9	5
655	Picoline, 3-	C6H7N	108-99-6	0.7
656	Pine oil	N/A	8002-09-3	1
657	Pinene	C10H16	80-56-8	0.4
658	Pinene, α-	C10H16	2437-95-8	0.34
659	Pinene, β-	C10H16	127-91-3	0.45

Index	Chemical name	Formula	CAs no.	10.6 eV
660	Piperazine	C4H10N2	110-85-0	0.8
661	Piperylene	C5H8	504-60-9	0.9
662	Polysulfides, di-tert-Bu	C10H22S2	68937-96-2	0.5
663	Prop-2-yn-1-ol	C3H4O	107-19-7	3.7
664	Propadiene	C3H4	463-49-0	1
665	Propan-1-ol	C3H8O	71-23-8	5.4
666	Propanamide	C3H7NO	79-05-0	2
667	Propane-1,2-diol	C3H8O2	57-55-6	2.8
668	Propargyl chloride	C3H3Cl	624-65-7	8.4
669	Propene	C3H6	115-07-1	1.4
670	Propiolic acid	C3H2O2	471-25-0	8
671	Propionaldehyde	C3H6O	123-38-6	3
672	Propionic acid	C3H6O2	79-09-4	10
673	Propanoic Acid, 3-Methoxy-, Methyl Ester	C5H10O3	3852-09-3	1.2
674	Propoxy-2-propanol, 1-	C6H14O2	1569-01-3	1.2
675	Propyl acetate, n-	C5H10O2	109-60-4	3
676	Propyl butanoate	C7H14O2	105-66-8	1.3
677	Propyl formate	C4H8O2	110-74-7	19
678	Propyl iodide	C3H7I	107-08-4	0.3
679	Propyl mercaptan	C3H8S	107-03-9	1
680	Propyl propionate	C6H12O2	106-36-5	2
681	Propylbenzene	C9H12	103-65-1	0.5
682	Propylbenzene (all isomers)	C9H12	74296-31-4	0.5
683	Propylene carbonate	C4H6O3	108-32-7	15
684	Propylene glycol butyl ether	C7H16O2	5131-66-8	1
685	Propylene glycol ethyl ether acetate	C7H14O3	98516-30-4	1.2
686	Propylene oxide	C3H6O	75-56-9	6
687	Propyne	C3H4	74-99-7	4
688	Pyrazine	C4H4N2	290-37-9	3
689	Pyridine	C5H5N	110-86-1	0.7

Index	Chemical name	Formula	CAS no.	10.6 eV
690	Pyridinol, 4-	C5H5NO	626-64-2	3
691	Pyridylamine, 2-	C5H6N2	504-29-0	0.8
692	Pyrrole	C4H5N	109-97-7	1.4
693	Pyruvaldehyde	C3H4O2	78-98-8	0.7
694	Rose oxide, cis-	C10H18O	16409-43-1	0.8
695	Sec-amyl acetate	C7H14O2	626-38-0	5
696	Stibine	SbH3	7803-52-3	1.5
697	Skatole	C9H9N	83-34-1	0.4
698	Styrene	C8H8	100-42-5	0.45
699	Styrene Oxide	C8H8O	96-09-3	0.9
700	Sulfur dichloride	Cl2S	10545-99-0	2
701	Terpineol, α-	C10H18O	98-55-5	1
702	Terpinolene	C10H16	586-62-9	0.6
703	Terpinyl acetate, α-	C12H20O2	80-26-2	1.2
704	Terpinyl methyl ether, alpha-	C11H20O	14576-08-0	0.7
705	Tert-amyl methyl ether	C6H14O	994-05-8	0.8
706	Tert-butanol	C4H10O	75-65-0	1.6
707	Tert-butyl acetate	C6H12O2	540-88-5	1.05
708	Tert-butyl bromide	C4H9Br	507-19-7	0.99
709	Tert-butyl formate	C5H10O2	762-75-4	8
710	Tert-butyl hydroperoxide	C4H10O2	75-91-2	2
711	Tert-butyl isocyanate	C5H9NO	1609-86-5	3
712	Tetrabromoethane, 1,1,2,2-	C2H2Br4	79-27-6	2
713	Tetracarbonylnickel	NiC4O4	13463-39-3	1
714	Tetrachloroethylene	C2Cl4	127-18-4	0.6
715	Tetrachloropyridine, 2,3,5,6-	C5HNCl4	2402-79-1	1
716	Tetrafluoroethylene	C2F4	116-14-3	15
717	Tetrahydrofuran	C4H8O	109-99-9	2.3
718	Tetrahydrofurfuryl acrylate	C8H12O3	2399-48-6	2
719	Tetrahydronaphthalene	C10H12	119-64-2	0.4

Index	Chemical name	Formula	CAS no.	10.6 eV
720	Tetrahydropyran	C5H10O	142-68-7	1.5
721	Tetrahydrothiophene	C4H8S	110-01-0	0.7
722	Tetramethylbenzene (all isomers)	C10H14	95-93-2	0.3
723	Tetramethylbutane, 2,2,3,3-	C8H18	594-82-1	1
724	Tetramethyldisiloxane, 1,1,3,3-	C4H14OSi2	3277-26-7	0.7
725	Tetramethylgermane	C4H12Ge	865-52-1	2
726	Tetramethylguanidine, N,N,N',N'	C5H13N3	80-70-6	0.6
727	Tetramethylsilane	C4H12Si	75-76-3	2
728	Thioacetic acid	C2H4OS	507-09-5	1.4
729	Thioanisole	C7H8S	100-68-5	0.6
730	Thiocarbonyl fluoride	CSF2	420-32-6	6
731	Thiocresol, m-	C7H8S	108-40-7	1.5
732	Thiocresol, o-	C7H8S	137-06-4	1.5
733	Thiocresol, p-	C7H8S	106-45-6	1.5
734	Thiocyanogen	C2S2N2	505-14-6	8
735	Thioformaldehyde trimer	C3H6S3	291-21-4	1.5
736	Thiophene	C4H4S	110-02-1	0.46
737	Thiophosgene	CSCl2	463-71-8	1
738	Thymol	C10H14O	89-83-8	0.7
739	Titanium-n-propoxide	C12H28O4Ti	3087-37-4	3
740	Toluene	C7H8	108-88-3	0.56
741	Toluene-2,4-diisocyanate	C9H6N2O2	584-84-9	1.6
742	Toluenesulfonyl chloride, p-	C7H7SO2Cl	98-59-9	3
743	Toluidine, o-	C7H9N	95-53-4	0.5
744	Tolylaldehyde, p-	C8H8O	104-87-0	0.8
745	Triazine, 1,3,5-	C3H3N3	290-87-9	6
746	Tributyl phosphate	C12H27O4P	126-73-8	5
747	Trichlorobenzene, 1,2,4-	C6H3Cl3	120-82-1	0.55
748	Trichloroethylene	C2HCl3	79-01-6	0.6
749	Triethyl borate	C6H15O3B	150-46-9	5

Index	Chemical name	Formula	CAS no.	10.6 eV
750	Triethyl phosphate	C6H15P04	78-40-0	1.2
751	Triethyl phosphite	C6H15O3P	122-52-1	1.5
752	Triethylaluminum	C6H15Al	97-93-8	1
753	Triethylbenzene	C12H18	25340-18-5	0.4
754	Triethylsilane	C6H16Si	617-86-7	2
755	Trifluoroethene	C2HF3	359-11-5	5
756	Trifluoroethyl methyl ether, 2,2,2-	C3H5F3O	460-43-5	10
757	Trifluoroiodomethane	CF3I	2314-97-8	2
758	Trifluoromethyl trifluorovinyl ether	C3F6O	1187-93-5	5
759	Trifluoromethylphenol,3-	C7H5F3O	98-17-9	1
760	Trimethoxyvinylsilane	C5H12O3Si	2768-02-7	2
761	Trimethyl phosphite	C3H9O3P	121-45-9	2
762	Trimethylbenzene mixtures	C9H12	25551-13-7	0.3
763	Trimethylbenzene, 1,2,4-	C9H12	95-63-6	0.6
764	Trimethylbenzene, 1,3,5-	C9H12	108-67-8	0.4
765	Trimethylcyclohexane, 1,2,4-	C9H18	2234-75-5	1
766	Trimethylene oxide	C3H6O	503-30-0	1.5
767	Trimethylsilane	C3H10Si	993-07-7	1
768	Trimethylthioacetic S-acid	C5H10OS	55561-02-9	1
769	Trioxane	C3H6O3	110-88-3	13
770	Tropathiane	C8H16OS	67715-80-4	0.46
771	Tripropylene glycol	C9H20O4	24800-44-0	3
772	Turpentine	C10H16	9005-90-7	0.6
773	Turpentine oil	C10H16	8006-64-2	0.6
774	TVOC			1
775	Undecane	C11H24	1120-21-4	1.1
776	Undecylenic acid	C11H20O2	112-38-9	1.5
777	Vanillin	C8H8O3	121-33-5	1
778	Vinyl acetate	C4H6O2	108-05-4	1.5
779	Vinyl bromide	C2H3Br	593-60-2	1.5

Index	Chemical name	Formula	CAS no.	10.6 eV
780	Vinyl chloride	C2H3Cl	75-01-4	2.1
781	Vinyl ethyl ether	C4H8O	109-92-2	1
782	Vinyl fluoride	C2H3F	75-02-5	2
783	Vinyl-2-pyrrolidinone, 1-	C6H9NO	88-12-0	4.5
784	Vinylcaprolactam ,N-	C8H13NO	2235-00-9	1
785	Vinylcyclohexene	C8H12	100-40-3	0.47
786	Vinylene carbonate	C3H2O3	872-36-6	3.5
787	Vinylidene difluoride	C2H2F2	75-38-7	5
788	Vinylsilane	C2H6Si	7291-09-0	1.5
789	Xylene mixed isomers	C8H10	1330-20-7	0.54
790	Xylene, m-	C8H10	108-38-3	0.47
791	Xylene, o-	C8H10	95-47-6	0.51
792	Xylene, p-	C8H10	106-42-3	0.55
793	Xylidine, all	C8H11N	1300-73-8	0.7

Calibration and maintenance

Do not perform any maintenance operation with the power on.

Clean the device with a soft damp cloth. Do not use any abrasive cleaning agents. Do not immerse the device in water or any cleaning media.

NOTE! Cleaning instruments and spare parts are not included in the delivery set, Please contact your Seller for more information.

How often the PID needs maintenance?

The frequency of calibration and maintenance depends on operating conditions (VOC concentration, humidity, dust, and oil in the air, etc).

In clean indoor air with low VOC concentration, a monthly or less frequent calibration is recommended. When higher VOC concentrations are measured under harsh conditions, perform calibration and maintenance more frequently.

PID needs maintenance if:

- The baseline is climbing after you zero the PID – replace the electrode stack.
- The PID becomes sensitive to humidity – replace electrode stack.
- The PID cell shows signs of contamination after the lamp window has been cleaned – replace the electrode stack.
- The PID cell is known to have been subjected to severe contamination– replace the electrode stack
- The baseline is unstable or shifts when you move the PID – replace the electrode stack
- The sensitivity has dropped too much (note the change required when checking
- calibration) – clean the lamp
- The signal to noise ratio at low VOC concentrations becomes inadequate – replace the lamp

Cleaning of the PID lamp is recommended as the first action when a PID needs maintenance. It is recommended to recalibrate the device every time after stack replacement or lamp cleaning.

Removing the electrode stack and lamp

NOTE! Always use the Electrode Stack Removal Tool to remove the electrode stack; any other tools may damage your PID and invalidate your warranty.

To remove the electrode stack, proceed as follows:

1. Gently remove the sensor from the equipment.
2. Place the PID, pellet side down, onto a clean surface.
3. Locate the electrode stack removal tool into the two slots on the sides of the PID and squeeze together until the electrode stack and lamp are released.
4. Carefully lift the PID body away from the pellet and lamp.
5. Occasionally the lamp may be temporarily lodged in the cell and will need to be freed carefully with tweezers.
6. Occasionally the small spring behind the lamp will come out when the lamp is removed from the sensor. Simply place it into the sensor house.

Electrode stack removing tool

Electrode stack

Cleaning the PID Lamp

Inspection of the lamp may reveal a layer of contamination on the detection window that presents itself as a 'blue hue.' To check for contamination, hold the lamp in front of a light source and look across the window surface. To avoid contaminating the sensor and affecting accuracy, do not touch the lamp window with bare fingers. You may touch the body of the lamp with clean fingers.

NOTE! Always use the recommended cleaning kit to clean the lamp.

PID lamp cleaning kit

The vial of the cleaning compound contains alumina (CAS Number 1344-28-1) as a very fine powder. Please contact your Seller for a full material safety data sheet MSDS.

Key safety issues are identified below:

Hazard identification: May cause irritation of the respiratory tract and eyes.

Storage: Keep container closed to prevent water absorption and contamination

Handling:

- Do not breathe in the powder. Avoid contact with skin, eyes, and clothing;
- Wear suitable protective clothing;
- Follow industrial hygiene practices: Wash face and hands thoroughly with soap and water after use and before eating, drinking, smoking, or applying cosmetics.
- The powder carries a TVL (TWA) limit of 10 mg/m^3

PID lamp cleaning instructions:

1. Open the container of the alumina polishing compound;
2. With a clean cotton bud, collect a small amount of the powder;
3. Use this cotton bud to polish the PID lamp window. Use a circular action, applying light pressure to clean the lamp window. Do not touch the lamp window with fingers;
4. Continue polishing until an audible “squeaking” is made by the cotton bud moving over the window surface (usually within 15 seconds);
5. Remove the residual powder from the lamp window with a clean cotton bud. Care must be taken not to touch the tips of cotton buds that are to be used to clean the lamps as this may contaminate them with finger oil.
6. Ensure the lamp is completely dry and remove any visible signs of contamination before refitting.

Re-fitting the PID electrode stack and lamp

NOTE! Never refit a damaged lamp.

1. Place the lamp inside the O-ring seal in the pellet as illustrated below. Twisting the lamp slightly during insertion will help to ensure the lamp window is snug against the electrode stack's front electrode. The lamp should be freely supported by the O-ring.
2. Continuing to hold the electrode stack between forefinger and thumb, carefully insert the lamp into the recess in the sensor ensuring that the lamp remains in position. Press the electrode stack firmly, to ensure that the electrode stack wing clips are engaged, and the top faces of the electrode stack and sensor house are flush.
3. Refit the sensor into the sensing equipment.
4. Recalibrate the gas detector.

Discarding the PID electrode stack

The electrode stack does not have any toxic components, however, if it has been contaminated by toxic materials, show due care when disposing of.

Delivery set

- Detector-transmitter E2608 (wall mount or duct mount version)
- Mounting accessories:
  - 4 cross-shaped mounting lug with screws and 4 screws with plastic dowels for wall mount version
  - Square Rubber flange for Duct mount option
  - Round rubber flange for Remote probe option
  - Fixing clamp for Remote probe option

Order code for E2608-PID options

E2608 options	Order code
Remote probe, 3 m cable	E2608-PID-RP33-3
Remote probe, 10 m cable	E2608-PID-RP33-10
Duct mount option, stem Ø35×L230 mm	E2608-PID-DM
Integrated 90...265 V mains power supply module	E2608-PID-230
Integrated 24 VAC power supply module	E2608-PID-24VAC

Configuring

A standard configuration kit includes a USB-RS485 converter, fixed flow regulator, gas tubing with applicators, and a software pack. Please contact your Seller for more information.

Gas detector-transmitters E2608 share all functionalities of the PluraSens® multifunctional detector-transmitter platform. The features and options include:

- Digital output change rate-limiting filter
- Digital integrating (averaging) filter
- Free assignment of each analog output to the chosen parameter
- Flexible setting of analog output scales for each output
- Output zero and slope adjustment for calibration
- Free assignment of each of two relays to the chosen parameter
- Several relay control logic modes
- Switch delays and minimum on/off state durations for each relay

The output scales can be changed by Modbus commands by using the configuration software and the standard configuration kit (see Modbus RTU Communication).

Return to default settings

To reset the device's Slave ID, baud rate, and stop bit numbers to factory settings, proceed as follows:

1. De-energize the device
2. Connect the X6 jumper
3. Turn on the device
4. De-energize the device
5. Disconnect the X6 jumper
6. Turn on the device

NOTE! Cables should be connected / disconnected from PCB when the power supply is unplugged. Connecting or Disconnecting Live wires can result in Corrupt Firmware.

Modbus RTU Communication

RS485 communication interface

Databits: 8 Parity: none / odd / even Stop bits: 1 or 2 Protocol: Modbus RTU	Supported Modbus functions: 03 – Read multiple registers 06 – Write a single register

Communication parameters

Parameter	Permitted values	Default
Supported baud rates	1200, 2400, 4800, 9600, 19200, 38400, 57600	9600
Data bits	8	8
Parity	none / odd / even	none
Stop bits	1, 2	1
Protocol	Modbus RTU	
Modbus functions	03 - Read multiple registers 06 - Write a single register	
Error codes	01 – Illegal function 02 – Illegal data address 03 – Illegal data value 04 – Slave device failure (details of last error 04 can be read from register 0x0008)	

Modbus holding registers

Register addresses are shown 0-based, Address in hexadecimal, Reg in decimal format. Modbus holding register numbers MHR are shown in the decimal 1-based format and may be addressed either from 00001 or 40001 base.

Address	Reg / MHR	RW	Description	Supported values (dec)	Default
0x0001	1 / 40002	R	Hardware version		-
0x0002	2 / 40003	R	Software version		-
0x0003	3 / 40004	R	Product serial number	1...65535	-
0x0004	4 / 40005	RW	Slave ID (net address) *	1...247 **	1

0x0005	5 / 40006	RW	Baud rate *	1200, 2400, 4800, 9600, 19200, 38400, 57600	9600
0x0006	6 / 40007	RW	Response delay, ms	1...255	10
0x0007	7 / 40008	RW	Stop bits, parity bit *	1 – No parity bit, 1 stop bit (default after factory reset) 2 – No parity bit, 2 stop bits 3 – Odd parity, 1 stop bit 4 – Even parity, 1 stop bit **NOTE**: 3 and 4 are available starting from the Software version 0x218 (dec. 536)	1
0x0008	8 / 40009	R	Last error code	1...255	-
0x0011	17 / 40018	RW	Technological: age of last data in seconds (read) / restart (write)	0...65535 s (read), writing 42330 restarts the instrument	-

Address	Reg / MHR	RW	Description	Supported values (dec)	Default
0x00A5	165 / 40166	RW	Zero adjustment for gas data, ADC	-32000...+32000 ADC units	0
0x00A6	166 / 40167	RW	Slope adjustment for gas data	1...65535	512
0x00A7	167 / 40168	RW	Change rate limit for gas data, units / s	1...32000, 0 - no limit	0
0x00A8	168 / 40169	RW	Integrating filter time constant, s	1...32000 (seconds), 0 - no filter	0
0x00C9	201 / 40202	RW	Parameter tied to analog output 1	0 – None 2 – Gas concentration 9 – Forced Modbus control, value set in MHR / 40204	2
0x00CA	202 / 40203	RW	Parameter tied to analog output 2	0 – None 2 – Gas concentration 9 – Forced Modbus control, value set in MHR / 40205	2
0x00CB	203 / 40204	RW	Forced value for analog output 1***	0...1000 (0.0%...100.0% of output scale)	0
0x00CC	204 / 40205	RW	Forced value for analog output 2***	0...1000 (0.0%...100.0% of output scale)	0

0x00D3	211 / 40212	RW	Parameter tied to relay RE1	0 –none 2 – gas concentration 9 – control by Modbus control, state set in MHR / 40214	2
0x00D4	212 / 40213	RW	Parameter tied to relay RE2	0 – none 2 – gas concentration 9- – control by Modbus control, state set in MHR / 40215	2
0x00D5	213 / 40214	RW	Forced state for relay RE1***	0 –off, 1 – on	0
0x00D6	214/ 40215	RW	Forced state for relay RE2***	0 – off, 1 – on	0
0x00D7	215 / 40216	RW	Switching delay for relay RE1	0...1000 (s)	0
0x00D8	216 / 40217	RW	Switching delay for relay RE2	0...1000 (s)	0
0x00D9	217 / 40218	RW	Minimal on/off time for relay RE1	0...1000 (s)	0
0x00DA	218 / 40219	RW	Minimal on/off time for relay RE2	0...1000 (s)	0

Address	Reg / MHR	RW	Description	Supported values (dec)	Default
0x00DB	219 / 40220	RW	Control logic for relay RE1	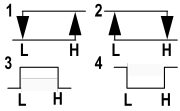 0 – none 1 – relay on at high values 2 – relay on at low values 3 – relay on at values within the range 4 – relay on for the values out of the range	0
0x00DC	220 / 40221	RW	Control logic for relay RE2	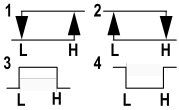 0 – none 1 – relay on at high values 2 – relay on at low values 3 – relay on at values within the range 4 – relay on for the values out of the range	0

0x00DD	221 / 40222	RW	LOW setpoint for relay RE1	0...65535 (gas units)	see Specifications
0x00DE	222 / 40223	RW	HIGH setpoint for relay RE1	0...65535 (gas units)	see Specifications
0x00DF	223 / 40224	RW	LOW setpoint for relay RE2	0...65535 (gas units)	see Specifications
0x00E0	224 / 40225	RW	HIGH setpoint for relay RE2	0...65535 (gas units)	see Specifications
0x00FF	255 / 40256	RW	Sensor, analog outputs, LED and buzzer status	bit[0]=0/1 – sensor present/absent, **RO** bit[1]=0/1 – analog outputs deactivated/activated bit[2]=0/1 – in case the sensor is absent, turn signaling off/on analog output1 bit[3]=0/1 – in case the sensor is absent, turn on signaling with low current/high current on analog output1; if bit[2]=0 this bit will be ignored bit[4]=0/1 – in case of sensor absent, turn signaling off/on analog output2 bit[5]=0/1 – in case of sensor absent, turn on signaling with low current/high current on analog output2; if bit[4]==0 this bit will be ignored bit[6]=0/1 – current/voltage output detected on output1, **RO** bit[7]=0/1 – current/voltage output detected on output2, **RO** bit[8]=0/1 – LED deactivated/activated bit[9]=0/1 – buzzer deactivated/activated bit[10]=0/1 - LED is on/off in normal condition bit[11]=0/1 - 1 Hz (50% on, 50% off) LED signal off/on if relay1 turned on bit[12]=0/1 - 2 Hz (50% on, 50% off) LED signal off/on if relay2 turned on	user defined

0x0101	257 / 40258	R	Raw gas sensor data	0...4095, ADC units	
0x0103	259 / 40260	R	Gas concentration, gas units	0...65535, gas units	
0x0105	261 / 40262	RW	0% value for analog output 1	-32000...+32000, gas units	User defined
0x0106	262 / 40263	RW	100% value for analog output 1	-32000...+32000, gas units	User defined
0x0107	263 / 40264	RW	0% value for analog output 2	-32000...+32000, gas units	User defined
0x0108	264 / 40265	RW	100% value for analog output 2	-32000...+32000, gas units	User defined

* – The new value is applied after restart.

** – Broadcast slave ID 0 can be used to assign a new ID to the instrument with an unknown ID. When addressing by ID 0 the device shall be the only Modbus instrument in the network. The device will not respond to the Master command when addressed by ID 0.

*** – This value is dynamic and not kept in EEPROM after a restart.

Warranty

This product is warranted to be free from defects in material and workmanship for a period of one year from the date of the original sale. During this warranty period, the Manufacturer will, at its option, either repair or replace a product that proves to be defective. This warranty is void if the product has been operated in conditions outside ranges specified by the Manufacturer or damaged by customer error or negligence or if there has been an unauthorized modification.

Manufacturer contacts

Evikon MCI OÜ

Teaduspargi 9, Tartu
50411 Estonia
info@evikon.eu
www.evikon.eu