DATASHEET

E2608

Evikon

Distributed by AKRIBIS

IP65 | 4-20 mA 0-10 V | RS485 Modbus

Carbon Dioxide Detector-Transmitter E2608-CO2

Features

- Wall-mount or duct-mount version
- Industrial IP65 housing
- Two analog outputs settable to 4-20 mA or 0-10 V
- RS485 Modbus RTU digital interface
- Two relays for alarm / ventilation control
- Attached or remote sensor

Specifications

Calibration	Carbon dioxide CO_2
Sensor type	Photoacoustic or Dual beam NDIR
Sampling method	Diffusion
Typical detection range	0...10 000 ppm (ordering code 10K) 0...40 000 ppm (ordering code 40K) 0...5% vol (ordering code 50KN) Up to 100% CO_2 on request
Resolution / digital unit	1 ppm for 10K 10 ppm for 40K 0.01% vol for 50KN
Response time	T60 ≤ 60 s for 10K/40K T50 ≤ 20 s; T90 ≤ 60 s for 50KN
Signal update	Every 5 seconds for 10K/40K Every 1 second for 50KN
Sensor lifetime	~ 10 years for 10K/40K ~ 5 years for 50KN
Maintenance interval	No field recalibration if ABC algorithm is enabled for 10K/40K 12 months for 50KN
Self-diagnostics	Full functionality check at start-up
Warm-up time	≤ 1 min
Power supply	12...36 VDC (default), 24 VAC or 230 VAC as options
Power consumption	< 2 VA
Digital interface	RS485, Modbus RTU protocol
Analog outputs	2 × 4-20 mA / 0-10 V, user settable
Output scale width	Recommended: 20-100% of the range; > 10 × resolution in any case
Output relays	2 × SPST relays (closing contact), 250 VAC / 30 VDC, 5 A max
Default alarm setpoints	Determined by user within 5-95% of the range
Enclosure	Grey ABS plastic, wall mount, protection class IP65

Wall mount version

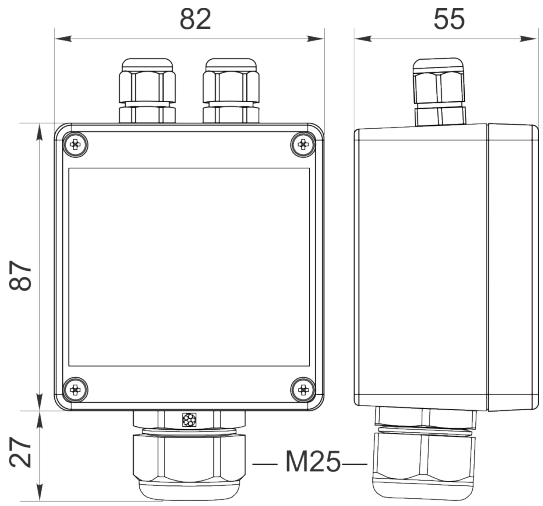

Duct mount version

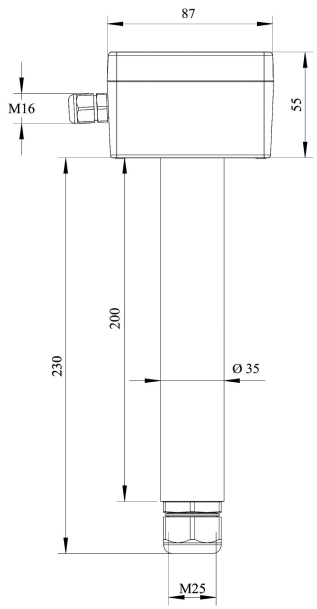

Ask for other versions or custom designed products

AKRIBIS · www.akribis.info · contacto@akribis.info

Dimensions	H87 × W82 × D55 mm
Remote sensor probe	Protection IP65, shielded cable default cable length 3.0 m
Operating environment	Industrial indoor and outdoor locations
Operating conditions	-40...+60 °C, 0...100 %RH; 0,9...1,1 atm; Explosion-safe areas; Non-aggressive atmosphere

Jumpers

J1	OUT1 type (open: 4-20 mA; closed 0-10 V)
J2	OUT2 type (open: 4-20 mA; closed 0-10 V)
X6	Reset Modbus network parameters to default

X4 terminals

OUT1	4-20 mA / 0-10 V output
OUT2	4-20 mA / 0-10 V output
0V	0 V / 24 VAC Neutral (optional)
A	RS485 A / Data +
B	RS485 B / Data -
+U	+24 VDC / 24 VAC Phase (optional)

X5 terminals (optional)

L	90…265 VAC Phase
N	90…265 VAC Neutral
RE1 NO	Relay 1, normally open terminal
RE1 COM	Relay 1, common terminal
RE2 NO	Relay 2, normally open terminal
RE2 COM	Relay 2, common terminal

Connection diagrams

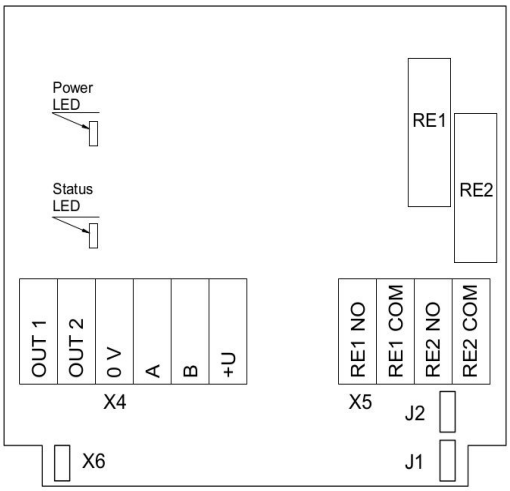

Version without PSU

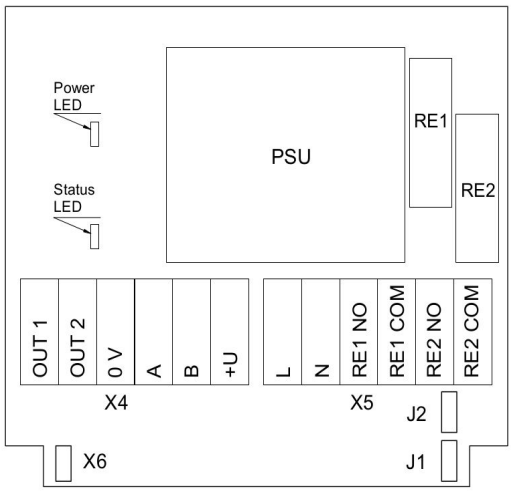

Version with PSU

Remote probe

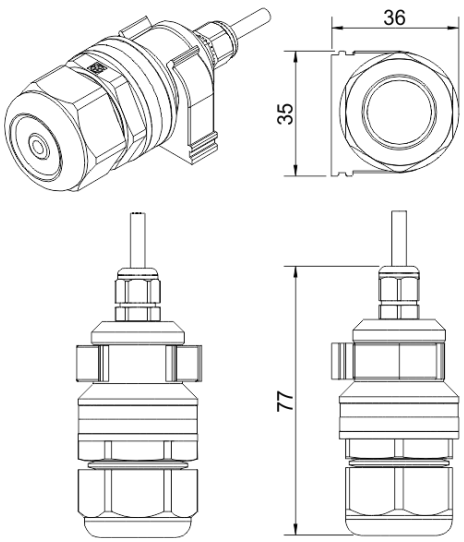

A

Wall mount remote probe with fixing clamp (default version)

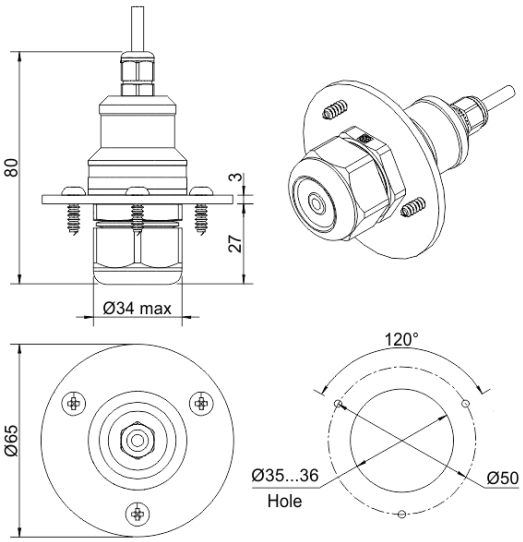

B

Remote probe with rubber flange and three self-tapping screws (on request)

With 50KN sensor dimensions

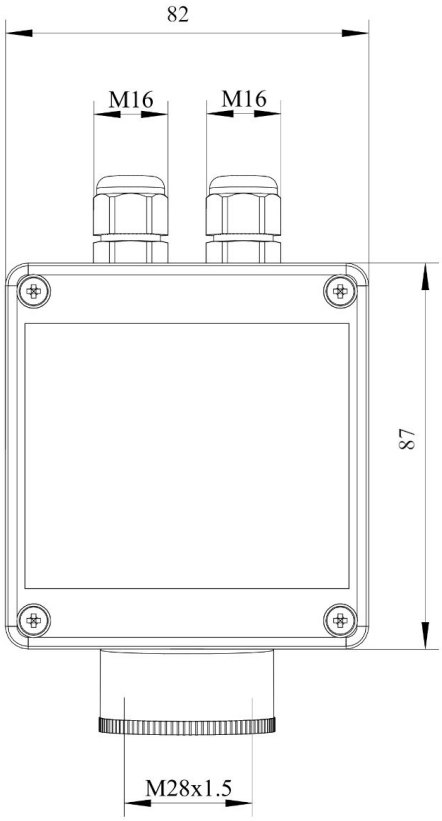

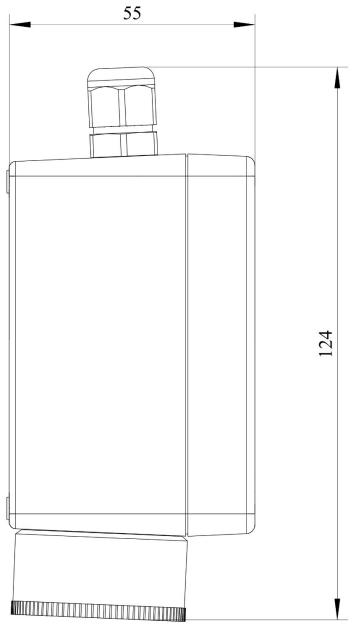

50KN sensor Remote probe

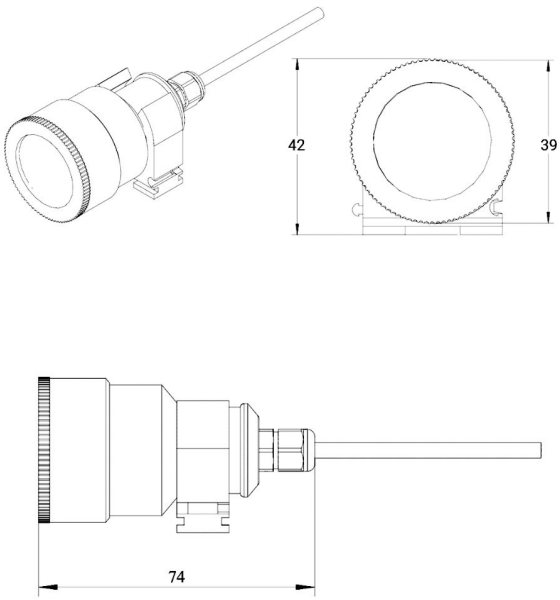

C

Wall mount remote probe with fixing clamp (default version)

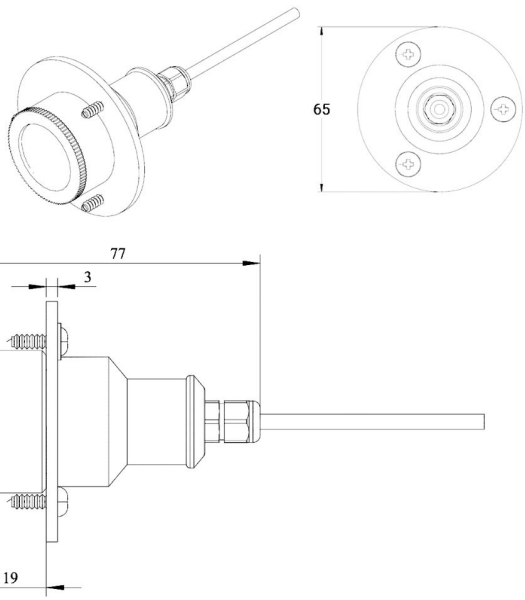

D

Remote probe with rubber flange and three self-tapping screws (on request)