USER GUIDE

E2353

Evikon

Distributed by AKRIBIS

PluraSens®

Lumber moisture transmitter

E2353

User Manual

Evikon

AKRIBIS · www.akribis.info · contacto@akribis.info

Table of contents

Specifications **3**

Product description **4**

Safety requirements **4**

Operating conditions **4**

Installation and connections **5**

Temperature compensation **7**

Screw electrodes **7**

Connector cables **8**

Delivery set **9**
- Order code for E2353 options 9

Emergency mode **10**

Return to default settings **10**

Modbus RTU Communication **11**
- RS485 communication interface 12
- Communication parameters 12

Modbus holding registers **12**

E2353 series Timber Types **17**
- Wood types and their corresponding register values. 17

Warranty **18**

Manufacturer contacts **18**

Specifications

Sensors	Conductivity sensor
Measurement range	7...20 % H2O
Resolution	0,01 %H2O
Accuracy	< ±1 %H2O
Self-diagnostics	Full functionality check at start-up
Warm-up time	≤ 15 s
Response time	~15 seconds
Power supply (Us)	12...36 VDC (default), 24 VAC as option
Power consumption	< 0,5 W
Analog outputs	2 × 4-20 mA / 0-10 V, user settable, freely configurable scales
Load resistance	R_L < (Us - 2 V) / 22 mA for 4-20 mA R_L > 250 kOhm for 0-10 V mode
Digital interface	RS485, Modbus RTU protocol no galvanic isolation
Cable connections	Screwless spring loaded terminals
Enclosure	Grey ABS, wall mount, protection class IP65
Dimensions	H82 × W80 × D55 mm
Weight	<450 g
Operating environment	Drying kilns
Operating conditions	-40...+85 °C, 0...100 %RH
CE marking	According to 2014/30/EU and 2014/35/EU: EN 61000-6-3:2020, EN 61326-1:2013(EMC, emissions) EN 61000-6-1:2019, EN 61000-6-2:2019(EMC, Immunity)

Product description

Lumber moisture transmitter E2353 is a member of the new PluraSens® family of multifunctional measurement instruments. The transmitter is intended for measurement of timber moisture during kiln drying.

Moisture content (MC) detection is based on the measurements of electrical resistivity of lumber. The device uses robust stainless steel screw electrodes and FEP insulated connection cable to ensure the stable operation under the harsh conditions in drying kilns. Options with different length of electrodes and/or cable are available.

Two freely configurable 4-20 mA or 0-10 V analog outputs can be used to connect the transmitter to secondary instruments. Each output can be independently assigned either to temperature or lumber moisture channel. RS485 interface with industry-standard Modbus RTU protocol allows direct Fieldbus networking of the transmitter.

Safety requirements

Always adhere to the safety provisions applicable in the country of use.

Do not perform any maintenance operation with the power on. Do not let water or foreign objects inside the device.

Operating conditions

The device should be used in explosion-safe (non ATEX -rated) indoor areas, without aggressive gases in the atmosphere. Allowed conditions are:

– Temperature in the range of -40...+85 °C;

– Lumber moisture in the range of 7...20% H2O;

– Atmospheric pressure in the range of 84...106,7 kPa.

Installation and connections

Connect the connection cables to the device main unit via the M12 connector. Mark and drill four mounting holes on the wall at the chosen mounting place (see dimensional drawing).

Unscrew four lid screws and detach the lid from the instrument. Fix the transmitter through mounting holes by screws.

Plug the power cable and connect the analog outputs and/or digital interface terminals to the relevant devices according to the connection diagram.

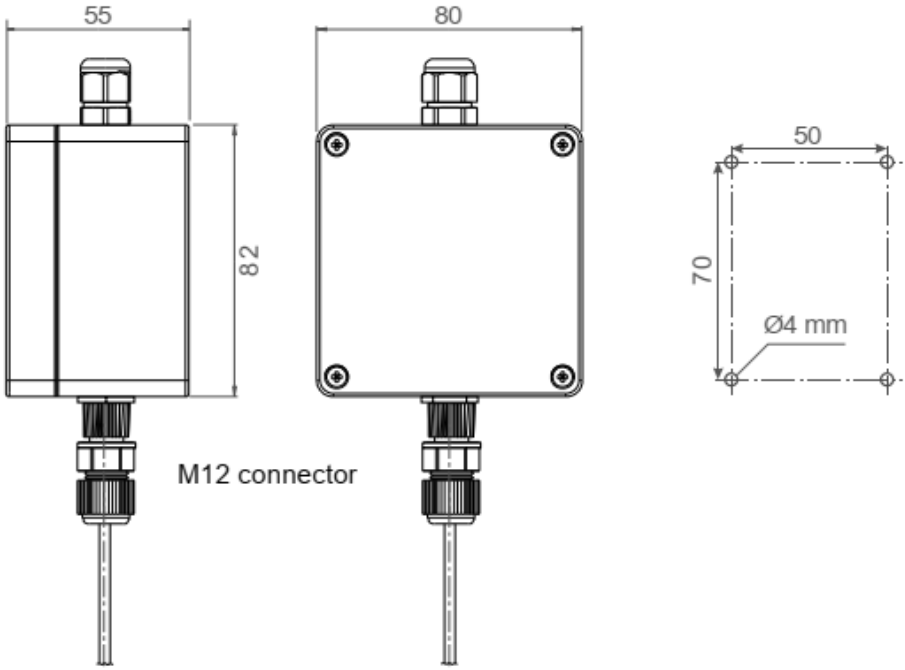

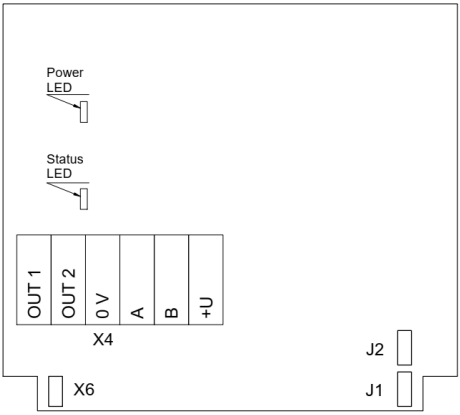

PCB without PSU and relays

Jumpers	
J1	OUT1 type (open: 4-20 mA; closed 0-10 V)
J2	OUT2 type (open: 4-20 mA; closed 0-10 V)
X6	Reset Modbus network parameters to default
X4 terminals	
OUT1	4-20 mA / 0-10 V output
OUT2	4-20 mA / 0-10 V output
0V	0 V / 24 VAC Neutral (optional)
A	RS485 A / Data +
B	RS485 B / Data -
+U	+24 VDC / 24 VAC Phase (optional)

Make certain that the cable gland is properly tightened to ensure the conformity to IP65 protection class.

The screwless quick connect spring terminals on the E2353 are suitable for a wide range of wires with cross-section 0,2...1,5 mm^2. The recommended wire stripping length is 8...9 mm. Push the spring loaded terminal lever, insert the wire end into the terminal hole and release the lever.

Use twisted pair cable, e.g. LiYY TP 2×2×0,5 mm2 or CAT 5, to connect the device to the RS485 network. Use one pair for A and B wires and the second pair for common 0V and power +U wires. to connect the transmitter to the Fieldbus network.polarity must be respected when connecting to an external RS485 network.

Overall length of all connections via RS485 interface should not exceed 1200 m.

Place the lid back and tighten it with the four screws.

Both analog outputs can be independently changed between 4-20 mA and 0-10 V type using jumpers J1 (OUT1) and J2 (OUT2). By closing pins on a specific jumper the related output is 0-10 V, with an open jumper the output is 4-20 mA. Power restart is required after changing the position of the jumpers.

The output assignments and scales can be changed by Modbus commands.

Temperature compensation

For the temperature compensation to work, the transmitter has to be placed inside the kiln. As the temperature is measured around the device itself.

Screw electrodes

Electrodes should be screwed in tightly, to assure proper insulation from any pollutants or liquids on the lumber surface which may decrease the accuracy of the measurement.

It is recommended to place electrodes parallel to the grain of the lumber and at distances between 20-120 mm.

The default length of the screw electrode is 25 mm with 15 mm variant available on request.

The cable should be connected to the electrodes after the electrodes are tightly screwed in and removed before unscrewing the electrodes.

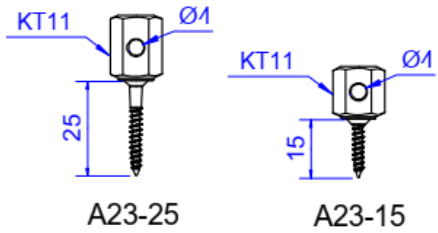

Connector cables

For connecting the device to the electrodes a FEP insulated cable is provided. The cable has a M12 connector on one end, to connect to the device, and two 4 mm banana plugs on the other side, to connect to the electrodes. The cable length is 5/10/15 m, depending on customers request or 5 m by default.

Delivery set

- Lumber moisture transmitter E2353
- Set of 2 screw electrodes
- Set of mounting accessories (4 screws with plastic dowels)

Order code for E2353 options

E2353 options	Order code
Lumber moisture transmitter, output 4-20 mA, 7...20 %H_2O	E2353-A-
Lumber moisture transmitter, output 0-10 V, 7...20 %H2O	E2353-U-
FEP cable 5 m, temperature compensator, 2 screw electrodes	E2353-C5
FEP cable 10 m, temperature compensator, 2 screw electrodes	E2353-C10
FEP cable 15 m, temperature compensator, 2 screw electrodes	E2353-C15
Spare screw electrode, L15 mm	E2353-A23-15
Spare screw electrode, L25 mm	E2353-A23-25

Emergency mode

The current outputs of the transmitter may be programmed via Modbus commands (register 255) to signal if the connection with the sensor is lost. The signal may be set to 3.8 mA or 21.5 mA.

Return to default settings

To reset the device's Slave ID, baud rate and stop bit number to factory settings, proceed as follows:

1. De-energize the device
2. Connect the X6 jumper
3. Turn on the device
4. De-energize the device
5. Disconnect the X6 jumper
6. Turn on the device

NOTE! Cables should be connected / disconnected from PCB when the power supply is unplugged. Connecting or Disconnecting Live wires can result in Corrupt Firmware.

Modbus RTU Communication

Modbus main holding registers (00xxx or 40xxx): 0-based, decimal

Reg	RW	Description
1	R	hardware version
3	R	product serial number
4	RW	Slave ID [1...247], default 1
5	RW	baud rate, default 9600
6	RW	response delay [1...255] ms, default 10
7	RW	stop bits , parity bit [1,2,3,4], default 1
16	R	software version
17	RW	write '42330' to restart
146	RW	Timber type
151	RW	Transmitter type
168	RW	integrating time constant [0...32000] s
201	RW	OUT1 parameter, 0:none, 1:T, 2:H2O
202	RW	OUT2 parameter, 0:none, 1:T, 2:H2O
258	R	temperature, °C×100, signed integer
259	R	compensated moisture, %H2O×100, integer
261	RW	OUT1 out 0%, °C / %H2O
262	RW	OUT1 out 100%, °C / %H2O
263	RW	OUT2 out 0%, °C / %H2O
264	RW	OUT2 out 100%, °C / %H2O

Note! New Slave ID, baud rate and stop bits values apply after restart
Supported Modbus functions: 03 - read multiple registers, 06 - write single register

Error codes	01 - illegal function 02 - illegal data address 03 - illegal data value 04 - slave device failure (details of last error 04 can be read from register 0x0008)

RS485 communication interface

Databits: 8 Parity: none / odd / even Stop bits: 1 or 2 Protocol: Modbus RTU	Supported Modbus functions: 03 – Read multiple registers 06 – Write a single register

Communication parameters

Parameter	Permitted values	Default
Supported baud rates	1200, 2400, 4800, 9600, 19200, 38400, 57600	9600
Data bits	8	8
Parity	none / odd / even	none
Stop bits	1, 2	1
Protocol	Modbus RTU	
Modbus functions	03 - Read multiple registers 06 - Write a single register	
Error codes	01 – Illegal function 02 – Illegal data address 03 – Illegal data value 04 – Slave device failure (details of last error 04 can be read from register 0x0008)	

Modbus holding registers

Registers Reg are shown in hexadecimal 0-based format.

Modbus holding register numbers MHR are shown in decimal 1-based format, and may be addressed either from 00001 or 40001 base.

Addr	Reg / MHR	RW	Description	Supported values (dec)	Default
0x0001	1 / 40002 / 40002	R	Hardware version		2353
0x0002	2 / 40003 / 40003	R	Aux parameter		-
0x0003	3 / 40004	R	Product serial number	1...65535	-
0x0004	4 / 40005 / 40005	RW	Slave ID (net address) *	1...247 **	1

0x0005	5 / 40006 / 40006	RW	Baud Rate *	1200, 2400, 4800, 9600, 19200, 38400, 57600	9600
0x0006	6 / 40007 / 40007	RW	Response delay, ms	1...255	10
0x0007	7 / 40008	RW	Stop bits, parity bit *	1 – no parity bit, 1 stop bit (default after factory reset) 2 – no parity bit, 2 stop bits 3 – odd parity, 1 stop bit 4 – even parity, 1 stop bit **NOTE**: 3 and 4 are available starting from the Software version 0x218 (dec. 536)	1
0x0010	16 / 40017	R	Software version		-
0x0011	17 / 40018 / 40018	RW	Restarts counter	write ‘42330’ to restart device	-
0x0014	20 / 40021	R	Counter of I2C errors	0...65535	-

Addr	Reg / MHR	RW	Description	Supported values (dec)	Default
0x0092	146 / 40147	RW	Timber type	0...10	0
0x00A2	162 / 40163	RW	Zero adjustment for ADC, ADC units	-32768...+32767	0
0x00A5	165 / 40166	RW	Zero adjustment for moisture data, %H2O x 100	-32768...+32767 (-327.68...+320.767 %H2O)	0
0x00A7	167 / 40168	RW	Change rate limit for moisture data, %H2O x 100/s	0...32000, (0.01...320 %H2O/s) 0=no limit	0
0x00A8	168 / 40169	RW	Integrating filter time constant, s	1...32000 (seconds), 0 - no filter	0
0x00C9	201 / 40202	RW	Parameter tied to analog output 1	0 – none 1 – temperature 2 – moisture 9 – forced Modbus control, value set in MHR / 40204	2

0x00CA	202 / 40203	RW	Parameter tied to analog output 2	0 – none 1 – temperature 2 – moisture 9 – forced Modbus control, value set in MHR / 40205	1
0x00CB	203 / 40204	RW	Forced value for analog output 1***	0...1000 (0,0%...100,0% of output scale)	0
0x00CC	204 / 40205	RW	Forced value for analog output 2***	0...1000 (0,0%...100,0% of output scale)	0
0x00D3	211 / 40212	RW	Parameter tied to relay RE1	0 – none 1 – temperature 2 – moisture 9 – control by Modbus control, state set in MHR / 40214	0
0x00D4	212 / 40213	RW	Parameter tied to relay RE2	0 – none 1 – temperature 2 – moisture 9 – control by Modbus control, state set in MHR / 40215	0
0x00D5	213 / 40214	RW	Forced state for relay RE1***	0 – off, 1 – on	0
0x00D6	214/ 40215	RW	Forced state for relay RE2***	0 – off, 1 – on	0
0x00D7	215 / 40216	RW	Switching delay for relay RE1	0...1000 (s)	0
0x00D8	216 / 40217	RW	Switching delay for relay RE2	0...1000 (s)	0
0x00D9	217 / 40218	RW	Minimal on/off time for relay RE1	0...1000 (s)	0
0x00DA	218 / 40219	RW	Minimal on/off time for relay RE2	0...1000 (s)	0

Addr	Reg / MHR	RW	Description	Supported values (dec)	Default
0x00DB	219 / 40220	RW	Control logic for relay RE1	0 – none 1 – relay on at high values 2 – relay on at low values 3 – relay on at values within the range 4 – relay on for the values out of the range	0

0x00DC	220 / 40221	RW	Control logic for relay RE2	0 – none 1 – relay on at high values 2 – relay on at low values 3 – relay on at values within the range 4 – relay on for the values out of the range	0
0x00DD	221 / 40222	RW	LOW setpoint for relay RE1	-32768...+32767 (-327.68...+327.67 %H2O / -327.68...+327.67 °C)	0
0x00DE	222 / 40223	RW	HIGH setpoint for relay RE1	-32768...+32767 (-327.68...+327.67 %H2O / -327.68...+327.67 °C)	0
0x00DF	223 / 40224	RW	LOW setpoint for relay RE2	-32768...+32767 (-327.68...+327.67 %H2O / -327.68...+327.67 °C)	0
0x00E0	224 / 40225	RW	HIGH setpoint for relay RE2	-32768...+32767 (-327.68...+327.67 %H2O / -327.68...+327.67 °C)	0
0x00FD	253 / 40254	R	ADC raw, MSW		
0x00FE	254 / 40255	R	ADC raw, LSW		
0x00FF	255 / 40256	RW	Sensor, analog outputs, LED and buzzer status	bit[0]=0/1 - sensor present/absent, read-only! bit[1]=0/1 - analog outputs deactivated/activated, bit[2]= 0/1 - in case of sensor absent, turn signaling off/on analog output1, bit[3]=0/1 - in case of sensor absent, turn on signaling with low current/high current on analog output1; if bit[2]==0 this bit will be ignored, bit[4]=0/1 - in case of sensor absent, turn signaling off/on analog output2 bit[5]=0/1 - in case of sensor absent, turn on signaling with low current/high current on analog output2; if bit[4]==0 this bit will be ignored, bit[6]=0/1 - current/voltage output detected on output1	0x300

				(only if bit[1] = 1), read-only! bit[7]=0/1 - current/voltage output detected on output2 (only if bit[1] = 1), read-only! bit[8]=0/1 - LED deactivated/activated, bit[9]=0/1 - buzzer deactivated/activated, bit[10]=0/1 - LED is on/off in normal condition	
0x0100	256 / 40257	R	Resistance of wood, megaohms	0...65.535 gigaohms	
0x0101	257 / 40258	R	Relative moisture of wood, not compensated, unit=0.01%	0...10000 (0...100%)	
0x0102	258 / 40259	R	Measured temperature, °C×100	signed integer, -4000...+12500 (-40,00...+125,00 °C)	
0x0103	259 / 40260	R	Relative moisture of wood, compensated, averaged, unit=0.01%	0...10000 (0...100%)	
0x0105	261 / 40262	RW	0% value of analog output1, °C / %H2O	-32768...+32767 (-32768...+32767 %H2O / -32768...+32767 °C)	0
0x0106	262 / 40263	RW	100% value of analog output1, °C / %H2O	-32768...+32767 (-32768...+32767 %H2O / -32768...+32767 °C)	100
0x0107	263 / 40264	RW	0% value of analog output2, °C / %H2O	-32768...+32767 (-32768...+32767 %H2O / -32768...+32767 °C)	0
0x0108	264 / 40265	RW	100% value of analog output2, °C / %H2O	-32768...+32767 (-32768...+32767 %H2O / -32768...+32767 °C)	100

* – The new value is applied after restart.

** – Broadcast slave ID 0 can be used to assign a new ID to the instrument with an unknown ID. When addressing by ID 0 the device shall be the only Modbus instrument in the network. The device will not respond to the Master command when addressed by ID 0.

*** – This value is dynamic and not kept in EEPROM after a restart.

E2353 series Timber Types

Wood types and their corresponding register values.

Wood type	Corresponding register value
Finnish Pine	0
Nordic Pine	1
Finnish Spruce	2
Nordic Spruce	3
Finnish Birch	4
Nordic Birch	5
Danish Oak	6
Middle European Oak	7
Alder	8
Larch v1	9
Larch v2	10

Warranty

This product is warranted to be free from defects in material and workmanship for a period of one year from the date of the original sale. During this warranty period, the Manufacturer will, at its option, either repair or replace a product that proves to be defective. This warranty is void if the product has been operated in conditions outside ranges specified by the Manufacturer or damaged by customer error or negligence or if there has been an unauthorized modification.

Manufacturer contacts

Evikon MCI OÜ

Teaduspargi 9, Tartu
50411 Estonia
info@evikon.eu
www.evikon.eu