USER GUIDE

DMT152

Vaisala · Authorized Partner

Distributed by AKRIBIS

M210865EN-K

User Guide

Vaisala DRYCAP® Dew Point Transmitter

DMT152

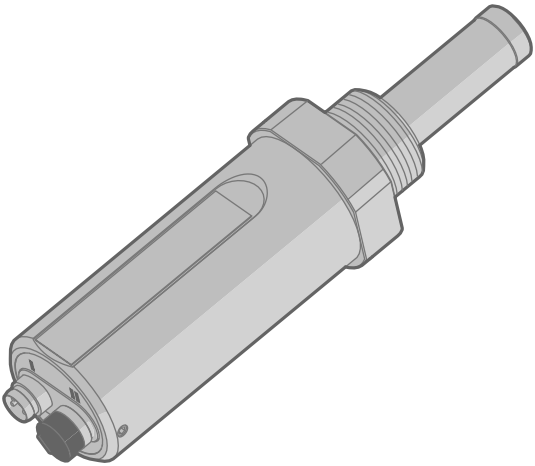

VAISALA

AKRIBIS · www.akribis.info · contacto@akribis.info

PUBLISHED BY

Vaisala Oyj
Vanha Nurmijärventie 21, FI-01670 Vantaa, Finland
P.O. Box 26, FI-00421 Helsinki, Finland
+358 9 8949 1

Visit our Internet pages at www.vaisala.com.

© Vaisala Oyj 2020

No part of this document may be reproduced, published or publicly displayed in any form or by any means, electronic or mechanical (including photocopying), nor may its contents be modified, translated, adapted, sold or disclosed to a third party without prior written permission of the copyright holder. Translated documents and translated portions of multilingual documents are based on the original English versions. In ambiguous cases, the English versions are applicable, not the translations.

The contents of this document are subject to change without prior notice.

Local rules and regulations may vary and they shall take precedence over the information contained in this document. Vaisala makes no representations on this document's compliance with the local rules and regulations applicable at any given time, and hereby disclaims any and all responsibilities related thereto.

This document does not create any legally binding obligations for Vaisala towards customers or end users. All legally binding obligations and agreements are included exclusively in the applicable supply contract or the General Conditions of Sale and General Conditions of Service of Vaisala.

Table of contents

1. About this document ... 7
1.1 Version information ... 7
1.2 Related manuals ... 7
1.3 Documentation conventions ... 7
1.4 Trademarks ... 8

2. Product overview ... 9
2.1 Introduction to DMT152 ... 9
2.1.1 Basic features and options ... 9
2.1.2 Transmitter structure ... 10
2.1.3 Safety ... 11
2.1.4 ESD protection ... 11
2.1.5 Regulatory compliances ... 11

3. Functional description ... 12
3.1 Advanced DRYCAP technology ... 12
3.1.1 Auto-calibration ... 12
3.1.2 Sensor purge ... 12

4. Installation ... 13
4.1 Selecting the location ... 13
4.2 Installing the transmitter ... 13
4.3 Wiring ... 15
4.3.1 Output noise minimization option ... 17
4.3.2 Connection cables ... 18
4.3.3 Power supply requirements ... 19
4.4 Loop-powered display ... 19
4.5 Sampling from process ... 20
4.6 Sampling accessories ... 21
4.6.1 DMT242SC sampling cell ... 21
4.6.2 DMT242SC2 sampling cell with Swagelok connectors ... 21
4.6.3 DSC74 sampling cell with quick connector and leak screw ... 22
4.6.4 DSC74B two-pressure sampling cell ... 23
4.6.5 DSC74C two-pressure sampling cell with coil ... 25
4.6.6 NW40 mounting flange ... 28

5. Serial line operation ... 29
5.1 Connecting to serial interface ... 29
5.1.1 Installing driver for USB service cable ... 29
5.1.2 Terminal application settings ... 29
5.1.3 List of serial commands ... 31
5.2 Device information ... 33
5.2.1 Show device information ... 33
5.2.2 Show transmitter status ... 33
5.2.3 Show firmware version ... 34

5.3 Configuring analog outputs ... 35
5.3.1 Limit alarm ... 36
5.3.2 Purge status alarm ... 37
5.3.3 Malfunction alarm ... 38
5.3.4 Select analog output parameter and scaling ... 39
5.4 Configuring serial line operation ... 39
5.4.1 Set serial line settings ... 39
5.4.2 Set serial line response time ... 40
5.4.3 Set transmitter address ... 40
5.4.4 Set measurement output format ... 40
5.4.5 Select unit ... 42
5.4.6 Set serial line operating mode ... 43
5.5 Configuring measurement parameters ... 43
5.5.1 Enable or disable sensor purge ... 43
5.5.2 Set pressure value for ppm calculation ... 44
5.5.3 Set molar mass for ppm_w calculation ... 45
5.6 Serial line output commands ... 46
5.6.1 Start measurement output ... 46
5.6.2 Stop measurement output ... 47
5.6.3 Set output interval ... 47
5.6.4 Output a reading once ... 47
5.7 Troubleshooting and maintenance commands ... 48
5.7.1 Display currently active errors ... 48
5.7.2 Test analog outputs ... 48
5.7.3 Calibrate analog output ... 49
5.7.4 Extend analog output range ... 49
5.8 Other commands ... 50
5.8.1 Opening the transmitter in POLL mode ... 50
5.8.2 Closing the connection to a transmitter in POLL mode ... 50
5.8.3 Display command list ... 51
5.8.4 Set time ... 51
5.8.5 Reset transmitter ... 51
5.8.6 Set LED voltage ... 51
5.8.7 Restore factory settings ... 52

6. Maintenance ... 53
6.1 Cleaning the transmitter ... 53
6.2 Changing the filter ... 53
6.3 Calibration and adjustment ... 54
6.3.1 Field check using DM70 ... 54

7. Troubleshooting ... 57
7.1 Typical problems ... 57
7.2 Unknown serial settings ... 57
7.3 Error state ... 57
7.4 Error codes ... 58

8. Technical data 60
8.1 Specifications 60
8.2 Spare parts and accessories 63
8.3 Dimensions 65

Warranty 67

Technical support 67

Recycling 67

List of figures

Figure 1 DMT152 probe parts....10
Figure 2 DMT152 installed directly to pipeline (max. 50 bar)....13
Figure 3 Connectors I and II....16
Figure 4 Connector pinout....16
Figure 5 Output noise minimization wiring option....17
Figure 6 Nokeval 301 loop-powered display....20
Figure 7 DMT152 Nokeval 301/302 wiring diagram....20
Figure 8 Sampling cells DMT242SC2 (left) and DMT242SC (right)....22
Figure 9 DSC74 sampling cell with accessories....23
Figure 10 DSC74B....24
Figure 11 Removing the leak screw....25
Figure 12 Default assembly of DSC74C....26
Figure 13 Alternative assembly of DSC74C (for tight spaces)....27
Figure 14 NW40 mounting flange....28
Figure 15 NW40 mounting flange dimensions....28
Figure 16 Filter structure....53
Figure 17 Accuracy over temperature range....61
Figure 18 DMT152 dimensions....65

List of tables

Table 1 Document versions (English)....7
Table 2 Related manuals....7
Table 3 DMT152 measurement parameters....9
Table 4 Standard wiring pinouts and wire colors....15
Table 5 Output noise minimization wiring option pinouts and wire colors....17
Table 6 Connection cable options....18
Table 7 Default serial interface settings....29
Table 8 List of serial commands....31
Table 9 ? command....33
Table 10 STAT command....34
Table 11 VERS command....34
Table 12 AMODE command....35
Table 13 ALARM command....36
Table 14 STATUS command....38
Table 15 AERR command....38
Table 16 ASEL command....39
Table 17 SERI command....39
Table 18 FORM command parameters....41
Table 19 FORM command modifiers....41
Table 20 UNIT command....42
Table 21 SMODE command....43
Table 22 Selection of output modes....43
Table 23 XPUR command....44
Table 24 PRES and XPRES command....44
Table 25 Pressure conversion coefficients....45
Table 26 MOL command....46
Table 27 R command....46
Table 28 INTV command....47
Table 29 ERRS command....48
Table 30 ATEST command....48
Table 31 ACAL command....49
Table 32 AOVER command....49
Table 33 OPEN command....50
Table 34 CLOSE command....50
Table 35 TIME command....51
Table 36 LED command....52
Table 37 Error codes....58
Table 38 Measurement performance....60
Table 39 Operating environment....61
Table 40 Inputs and outputs....61
Table 41 Mechanical specifications....62
Table 42 Output cable specifications....63
Table 43 Accessories....63

1. About this document

1.1 Version information

Table 1 Document versions (English)

Document code	Date	Description
M210865EN-K	February 2020	This manual. Updated row *Measurement environment* in Table 39 (page 61).
M210865EN-J	October 2019	Previous version. • Added information on Nokeval display support. • Corrected the dew point measurement range upper limit specification from −10 °C to −20 °C. • Added information on the minimum valid pressure setting in the **PRES**/**XPRES** commands. • Updated the document template.
M210865EN-H	October 2017	IP class specification of the probe updated to IP66 (applies to probes manufactured from March 2017 onwards). Added information about the output noise minimization wiring option.

1.2 Related manuals

Table 2 Related manuals

Document code	Description
M210866EN	DMT152 Quick Reference Guide

1.3 Documentation conventions

WARNING! Warning alerts you to a serious hazard. If you do not read and follow instructions carefully at this point, there is a risk of injury or even death.

CAUTION! Caution warns you of a potential hazard. If you do not read and follow instructions carefully at this point, the product could be damaged or important data could be lost.

Note highlights important information on using the product.

1.4 Trademarks

DRYCAP® is a registered trademark of Vaisala Oyj.

All other product or company names that may be mentioned in this publication are trade names, trademarks, or registered trademarks of their respective owners.

2. Product overview

2.1 Introduction to DMT152

Vaisala DRYCAP® Dew Point Transmitter DMT152 measures dew point temperature accurately in a measurement range from −80 °C to −20 °C (−112 ... −4 °F). The maximum output range of the transmitter is −100 ... 20 °C (−148 ... +68 °F).

DMT152 is designed for a wide range of OEM applications. The transmitter is easy to install, and the mechanics have been designed for harsh environments requiring protection against dust, dirt, and splashed water.

The excellent stability and reliability of the transmitter's performance is based on advanced DRYCAP polymer sensor technology. The DRYCAP technology has low maintenance needs due to its excellent long-term stability and durability against condensation. For more information on DRYCAP technology, see Advanced DRYCAP technology (page 12).

DMT152 measurement parameters

Table 3 DMT152 measurement parameters

Parameter	Abbreviation	Metric unit	Non-metric unit
Dew point / frost point temperature	TDF	°C	°F
Parts per million	H2O	ppm_v/ppm_w	ppm_v/ppm_w

2.1.1 Basic features and options

- Calibrated dew point measurement range −80 ... −20 °C T_d, output range −100 ... +20 °C T_d
- Output in T_d [1] and ppm
- DRYCAP polymer sensor with auto-calibration and sensor purge ensures long-term stability
- Small size to fit in tight installations
- Two analog output channels, selectable from 0 ... 20 mA / 4 ... 20 mA and 0 ... 5 V / 0 ... 10 V
- Configurable alarm modes for analog outputs
- Digital output: RS-485
- Serial line connection also via USB serial interface cable
- Simultaneous use of analog and digital output possible
- Field check suitability with DM70 handheld meter
- Sampling cells with different installation options available as optional accessories

1) *When the dew point is below 0 °C, the transmitter outputs frost point for T_d*

- LED cable option that enables a visual indication of transmitter status: LED lit when measurement is frozen (for example, purge active), blinking for malfunction alarm

2.1.2 Transmitter structure

When the transmitter is delivered, the filter is protected by a yellow transport protection cap that keeps the sensor dry. The transport protection cap should be left on the transmitter during storage. Remove the transport protection cap before installing the transmitter.

The transmitter body does not have user serviceable parts inside, and is not designed to be opened. Opening the transmitter will void the warranty.

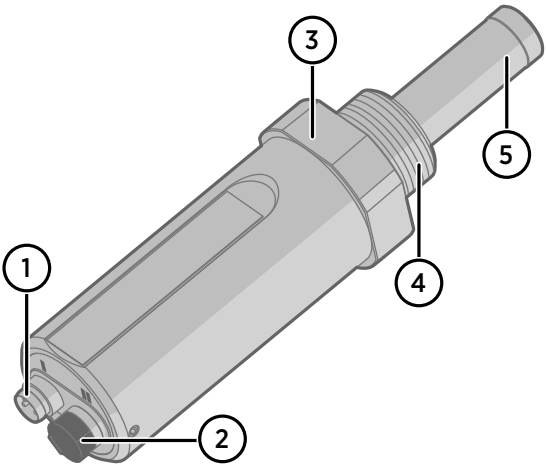

Figure 1 DMT152 probe parts

1 4-pin M8 connector **I**: analog output channels and operating power
2 4-pin M8 connector **II** (shown with protective cap): digital output (RS-485) and operating power
3 Tightening nut (30 mm)
4 Connection thread, alternatives:
    - ISO G1/2″
    - NPT 1/2″
    - UNF 3/4″-16 2A
    - UNF 5/8″-18
5 DRYCAP sensor protected with stainless steel mesh filter (see Changing the filter (page 53))

When installing a DMT152 transmitter with ISO or UNF thread, use a sealing ring to achieve a tight installation. Three copper sealing rings are provided with the transmitter, and more can be ordered from Vaisala. Note that the sealing rings for ISO and UNF threads are different. See Spare parts and accessories (page 63).

Do not use a sealing ring with the NPT thread. Instead, seal the thread using PTFE tape or PTFE sealant paste.

2.1.3 Safety

This product has been tested for safety. Note the following precautions:

CAUTION! Do not modify the unit. Improper modification can damage the product or lead to malfunction.

CAUTION! The transmitter body does not have user serviceable parts inside, and is not designed to be opened. Opening the transmitter will void the warranty.

2.1.4 ESD protection

Electrostatic discharge (ESD) can cause immediate or latent damage to electronic circuits. Vaisala products are adequately protected against ESD for their intended use. However, it is possible to damage the product by delivering an electrostatic discharge when touching, removing or inserting any objects inside the equipment housing.

Avoid touching component contacts or connectors when working with the device.

2.1.5 Regulatory compliances

This product is in conformity with the provisions of the following EU directives:

- EMC-Directive
- RoHS-Directive

Conformity is shown by compliance with the following standards:

- EN 61326-1: Electrical equipment for measurement, control, and laboratory use – EMC requirements – for use in industrial locations.
- EN 550022: Information technology equipment – Radio disturbance characteristics – Limits and methods of measurement

3. Functional description

3.1 Advanced DRYCAP technology

Dew point transmitter DMT152 utilizes an advanced, patented measurement technology to ensure accurate measurement with excellent long-term stability. This results in very low maintenance requirements for the transmitter. The lasting performance is achieved with microprocessor technology and software that automatically performs self-diagnostic functions in addition to the normal dew point measurement. The self-diagnostic procedures that are conducted are called auto-calibration, sensor purge, and sensor warming.

3.1.1 Auto-calibration

The auto-calibration feature of the DMT152 transmitter is an automatic procedure that greatly reduces the possible drift in the dry end of the dew point measurement.

Auto-calibration is performed:

- at 45-minute intervals
- at shorter intervals if T_d is near the dry end of the measurement range
- when the transmitter is powered up
- when the measured environment changes rapidly.

During auto-calibration the sensor is warmed for a short period (< 1 min) and the sensor capacitance values are evaluated at the elevated temperature. The possible dry end drift is then corrected to correspond to the calibrated values. Measurement and output remain active during auto-calibration.

Auto-calibration is carried out only if several criteria for the measurement environment are fulfilled. This ensures the reliability of the adjustments, and maintains the excellent long-term stability.

3.1.2 Sensor purge

Sensor purge is also an automatic procedure that minimizes the drift at the wet end readings of the dew point measurement. Sensor purge is performed once a week or when the power is switched on. The sensor is heated for several minutes, which will then evaporate all excess molecules out of the sensor polymer. This, together with the auto-calibration, results in a very small drift. The measurement output of the transmitter is frozen to the last measured value for the duration of the sensor purge.

4. Installation

4.1 Selecting the location

It is important that the conditions at the point of installation represent well the gas to be measured. Temperature changes do not affect the dew point measurement, but pressure changes will have an effect on the measurement. All leaks in the system must be eliminated to avoid ambient humidity affecting the measurement.

Direct installation to the measured gas is the recommended installation method if the temperature of the gas is suitable for DMT152 and no additional filtering is needed due to very dusty or oily gas. Oil as such is not harmful for the DRYCAP sensor, but response time may be slower if there are oil particles in the system, or if oil is collected to the filter over a longer period of time. The maximum measurement pressure is 50 bar_a / 725 psi_a (absolute pressure) for direct measurement.

If the gas temperature is higher than the specified maximum operating temperature of the transmitter, gas sampling and cooling it to ambient temperature (for example, 10 °C / 18 °F) is recommended. Note that the dew point temperature must be clearly lower than the ambient temperature to avoid condensation in the sampling line. Sampling from the process is easy by using Vaisala sampling cell options; see Sampling accessories (page 21).

DMT152 is light in weight, which means that it can be installed in a sample pipeline in the sampling cells without the need for any additional mechanical support.

4.2 Installing the transmitter

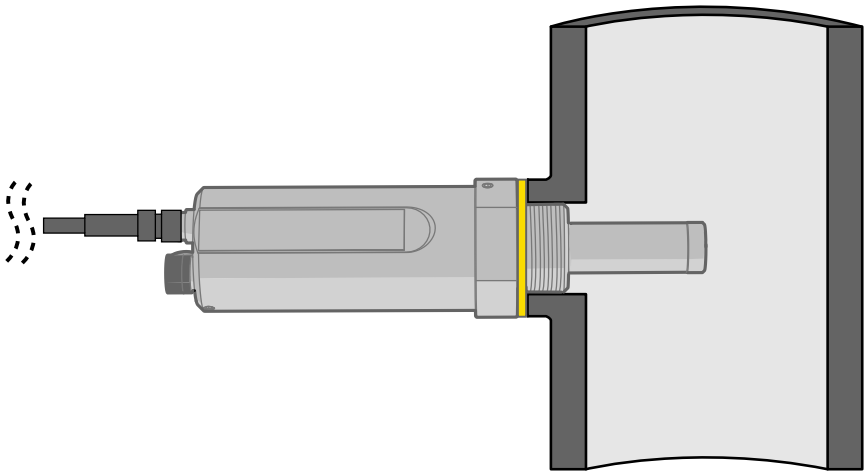

Figure 2 DMT152 installed directly to pipeline (max. 50 bar)

After selecting a suitable measurement location, install the transmitter as instructed here.

1. Remove the yellow transport protection cap from the transmitter. Do not touch the filter with your hands.

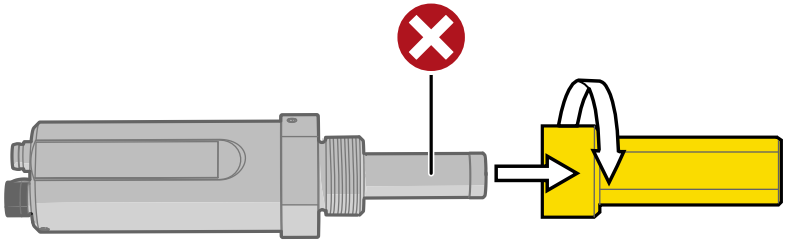

2. Prepare the sealing of the connection:
   a. If the transmitter has a parallel ISO G1/2″ thread or UNF 3/4″-16 thread, place the sealing ring at the base of the thread. Always use a new sealing ring; do not reuse a previously installed one.
   b. If the transmitter has an NPT 1/2″ thread, do not use the sealing ring. Instead, apply PTFE tape or suitable sealant paste to the thread. Follow the application instructions of the paste.
3. Make sure that the threads on the mounting point are of the correct type, and fasten the transmitter to the measurement point. Use your hands to turn the probe until it feels tight. Do not use force at this point, and check that the sealing ring (if used) remains centered.
4. Use a 30 mm wrench to tighten the connection to 25 Nm. If you do not have a 30 mm wrench, use a 1 3/16″ wrench or an adjustable wrench.

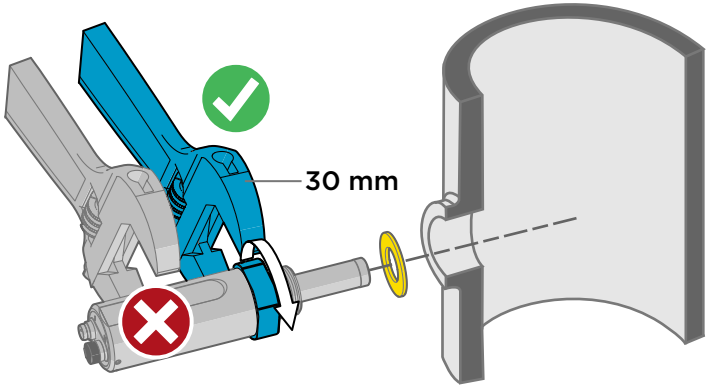

CAUTION! Only tighten the probe from the 30 mm tightening nut. Do NOT apply force to other points in the probe body.

5. Connect the wires of the connection cable. When using cables provided with DMT152, see Wiring (page 15) and Power supply requirements (page 19).
6. Plug in the cable to the transmitter. Be sure to use the correct connector; see Wiring (page 15).

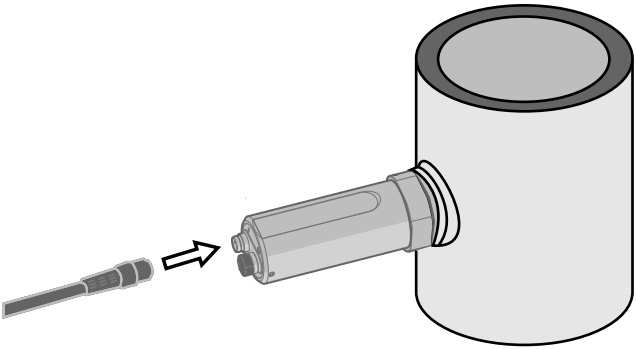

7. Cover the unused connector on the transmitter with the rubber plug that is attached to the transmitter.
8. Turn on the power supply. DMT152 performs self-diagnostics at startup, and the output is frozen for several minutes. The transmitter will output an approximated reading after one minute, but accurate measurement will only be available after the startup procedure is complete.

Normal operation is typically achieved in 10 ... 15 minutes. If the measurement environment changes during the startup, the startup may take up to 15 minutes.

The transmitter always performs the self-diagnostic procedure and sensor purge when starting up. Keep the transmitter continuously powered to optimize its measurement performance and availability.

4.3 Wiring

Table 4 Standard wiring pinouts and wire colors

Pin	Connector I	Connector II	Wire color
1	VDC supply+	VDC supply+	Brown
2	Signal Ch 1+	RS-485 - / B	White
3	GND	GND	Blue
4	Signal Ch 2+ / LED	RS-485 + / A	Black

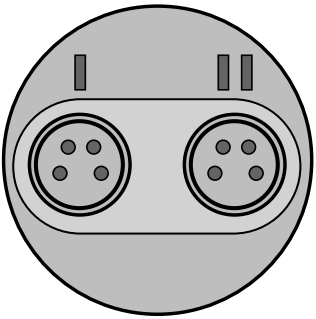

Figure 3 Connectors I and II

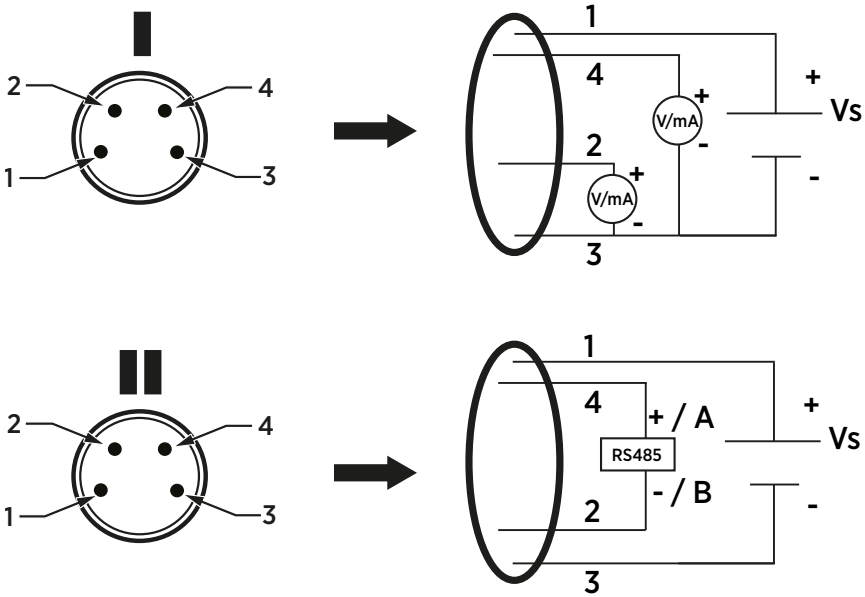

Figure 4 Connector pinout

CAUTION! The power supply lines are internally connected. You can use either one of them, but do not connect more than one supply voltage in permanent installations. Temporary simultaneous use with the USB serial interface cable or DM70 handheld dew point meter (which also provide operation power) is OK.

4.3.1 Output noise minimization option

To minimize the output noise:

- Wire only the analog outputs (V/mA) to Port I
- Connect the power supply only to Port II

Avoid connecting the Port I and Port II grounds (pin #3) together

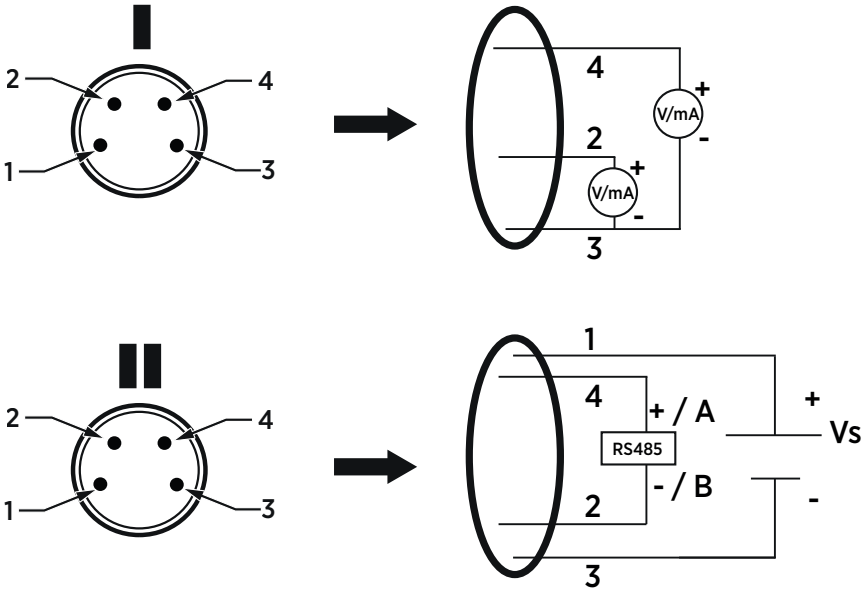

Figure 5 Output noise minimization wiring option

The wiring of pinouts 1 ... 4 in ports I and II in the output minimization option is described in the following table.

Table 5 Output noise minimization wiring option pinouts and wire colors

Pin	Connector I	Connector II	Wire color
1	Not wired	VDC supply+	Brown
2	Signal Ch 1+	RS-485 - / B	White
3	GND	GND	Blue
4	Signal Ch 2+ / LED	RS-485 + / A	Black

4.3.2 Connection cables

The following connection cable options are available for DMT152:

- Unshielded cable with M8 female straight snap-on connector
- Shielded cable with M8 female straight threaded connector
- Unshielded cable with LED indicator for analog channel 2, 90° angled M8 female threaded connector
- USB serial interface cable

For cable order codes, see Spare parts and accessories (page 63).

> Avoid using long cables (over 2 m) with voltage output.

Table 6 Connection cable options

DMT152 connection cable options	
Cable with snap-on connector	**Cable with threaded connector**
LED cable	**USB serial interface cable**

4.3.3 Power supply requirements

The DMT152 transmitters are designed to operate with a supply voltage of 15 ... 28 VDC (voltage output version) or 21 ... 28 VDC (current output version). When only the RS-485 output is used, 11 ... 28 VDC is enough in typical measurement conditions.

When measuring in pressures 20 ... 50 bar_a (290 ... 725 psi_a) or in temperatures −40 ... 0 °C (−40 ... 32 °F), a supply voltage of 21 ... 28 VDC is required.

The power supply should maintain the voltage for all load conditions. Voltage fluctuations must be smaller than 0.3 V, as continuous supply voltage fluctuation may interfere with the auto-calibration function.

- If auto-calibration has failed due to voltage fluctuation, you can verify it using the **STAT** command on the serial line. See Show transmitter status (page 33).
- If auto-calibration fails repeatedly, the **Autocal error** code will be activated. See Error codes (page 58).

Current consumption during normal operation is 20 mA. Consumption increases during auto-calibration and sensor purge. The maximum current consumption is 220 mA pulsed current.

> DMT152 can be powered by the MI70 indicator or the Vaisala USB cable. However, the power supplied by these devices may not be enough for all functions of the transmitter (for example, the current output).
> If you are using a separate power supply in connector I, connect the power supply first before connecting the USB cable or the MI70 indicator. The order is important, since the transmitter will use the power supply that is connected first.

4.4 Loop-powered display

DMT152 can be connected to a loop-powered external LED display. The display provides a reading of the output parameter. The display is powered by the 4 ... 20 mA current signal, so there is no need for an external power supply.

Two models are available:

- Nokeval 301 (Vaisala order code 226476)
- Nokeval 302 (with alarm relays, Vaisala order code 234759)

The display is delivered at its default settings. Configure the display functions and scaling according to the documentation delivered with the display. For a wiring example, see Figure 7 (page 20) .

> The loop resistance of the display must be included in the loop resistance calculation for the complete current loop. For the loop resistance of the display, refer to the manufacturer's documentation.

Figure 6 Nokeval 301 loop-powered display

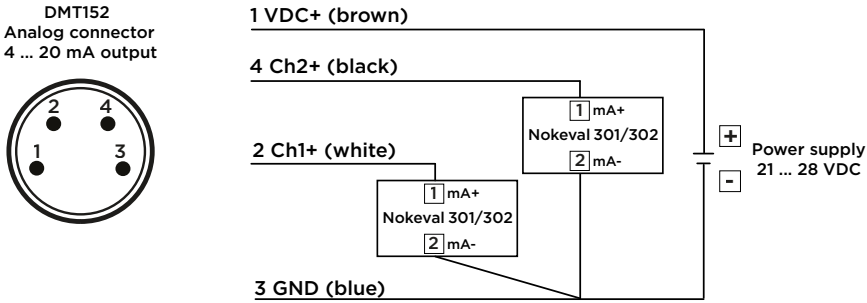

Figure 7 DMT152 Nokeval 301/302 wiring diagram

4.5 Sampling from process

Sampling is needed when direct measurement of the air or gas is not possible or desirable. This may be related to, for example, a high process temperature, protecting the sensor from water spikes, the need to easily detach the instrument from a pressurized process without running the whole process down, or wanting to make the measurement at a more convenient location. To get a representative sample of the process gas and avoid error sources caused by the sampling system, the following aspects should be considered:

Pressure

It is important to keep in mind that changing the pressure of a gas changes the dew point temperature of the gas. If the sensor is at a different pressure than the process itself, there may be an error of several tens of degrees in the dew point measurement. You can use the Vaisala Humidity Calculator to simulate the effect of pressure change to dew point. The Humidity Calculator can be found at www.vaisala.com/humiditycalculator.

Leak tightness and materials

Due to the typically very low level of humidity, dew point measurements are sensitive to ambient moisture leaks. It is therefore important to have a leak tight sampling system construction.

The system is likewise sensitive to diffusion of water molecules through the materials, as well as the absorption of moisture into the materials. The piping should preferably be made of metal, for example, stainless steel with a good surface finish. Hygroscopic materials such as plastics are undesirable and should be avoided.

Sample tubing should be as short in length as possible. "Dead ends" should be avoided. Also minimizing the number of connections helps in avoiding leaks. If possible, prepare for measurements by flushing the sampling lines with dry gas.

Flow

Vaisala DRYCAP sensor is not flow-dependent as such. For this reason, the flow of the system is not critical to the measurement, although a higher flow improves the response time. Typically, a flow of 1 ... 2 l/min (0.035 ... 0.7 ft^3/min) is enough.

4.6 Sampling accessories

4.6.1 DMT242SC sampling cell

The DMT242SC is a basic sampling cell with only the main sampling cell body. The inlet and outlet are female threaded sample connectors (inlet G3/8", outlet G1/4" ISO).

The DMT242SC is suitable for users requiring only a sampling cell to fit the transmitter into and doing further assembly (piping into inlet and outlet, valves, possible flow meter) by themselves.

4.6.2 DMT242SC2 sampling cell with Swagelok connectors

The DMT242SC2 is similar to DMT242SC, but connections are made easy. The sampling cell includes welded Swagelok connectors at both the inlet and outlet that fit directly to 1/4" tubing.

To fit 6 mm tubing to the connectors, an adapter such as Swagelok® Reducer SS-6M0-R-4 (not supplied by Vaisala) can be used.

DMT242SC2 is the suitable choice in, for example, plastics drying systems, where the measurement is made by tapping off the dryer system and bringing a small air stream to the sensor.

The Swagelok connectors of DMT242SC2 connect easily to a cooling coil or tubing, providing the essential function of cooling the dry air to ambient temperature before it reaches the sensor.

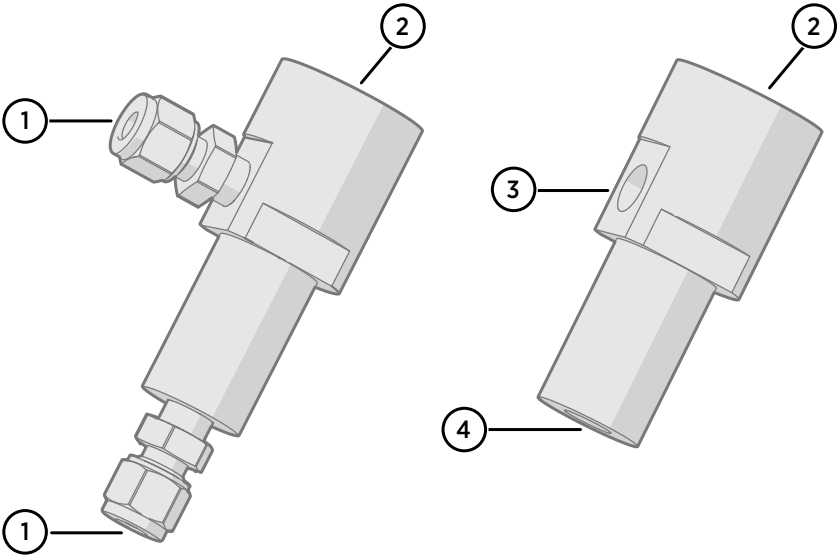

Figure 8 Sampling cells DMT242SC2 (left) and DMT242SC (right)

1 Male pipe welded connector Swagelok 1/4″
2 G1/2″
3 G1/4″
4 G3/8″

4.6.3 DSC74 sampling cell with quick connector and leak screw

The DSC74 has been designed especially for compressed air lines. The sampling cell contains an adjustable leak screw that allows keeping up the pipeline pressure at the sensor. The leak screw is opened and closed with a screwdriver. The leak screw should be 1/2 turn open. This can be verified by first closing the leak screw, then turning 1/2 turn to open it. Then the air coming out will make a barely audible little hiss and it can be lightly felt when putting a hand in front of the air stream.

Do not open the leak screw more than 1/2 turn to avoid reducing the pressure in the sampling cell.

The DSC74 comes with a quick connector that fits to industry standard compressed air line connectors (suitable for type D, Quick08, NIP08). This allows for easy installation and detachment of the dew point transmitter without having to shut down the process. Alternative ways to connect are through the two different thread adapters (G3/8″ to G1/2″ and G3/8″ to G1/4″ ISO) that are supplied with each DSC74 unit.

When using the DSC74, seal the threads of the quick connector or thread adapter carefully with PTFE thread seal tape. Tighten with an open-end wrench.

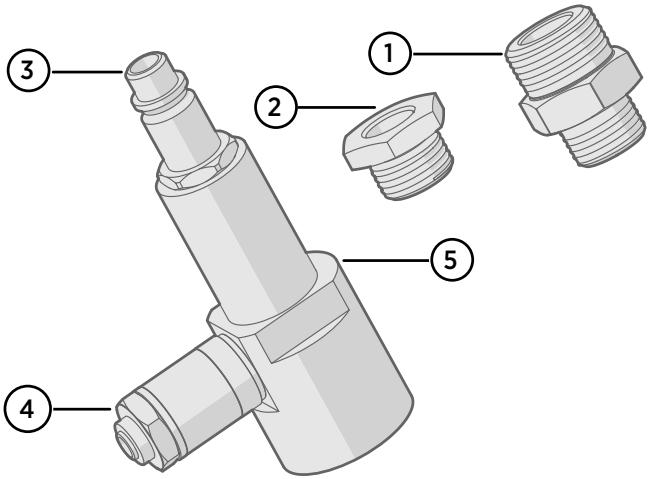

Figure 9 DSC74 sampling cell with accessories

1 Thread adapter type G3/8″ - G1/2″
2 Thread adapter type G3/8″ - G1/4″
3 Quick connector
4 Leak screw
5 Sampling cell body (DMT242SC)

4.6.4 DSC74B two-pressure sampling cell

The DSC74B and DSC74C sampling cells are enhanced versions of the DSC74. The body is designed in a way that it is possible to measure at both system pressure and atmospheric pressure.

The DSC74B limits the flow rate with a fixed leak screw. The flow is optimized for pressures 3 ... 10 barg. The fixed leak screw eliminates the risk of opening the leak screw fully by accident and this way emptying a gas vessel. The maximum flow can be increased, if needed, by removing the leak screw and adjusting the flow manually with the valve. Harmful gases can be recovered by connecting a collection system at the outlet (not available from Vaisala).

In the basic operation of the DSC74B, the gas flows to the sensor from the front and the outlet is on the side. To have the measurement done at atmospheric pressure, the inlet and outlet are reversed. Then the reducing parts supplied (G3/8″ - G1/2″ or G3/8″ - G1/4″) on the outlet side help to protect the sensor from ambient humidity coming in.

DSC74B parts are:

- Sampling cell, thread G3/8″
- Connection part with a needle valve and an integrated leak screw
- Reducing Nipple (thread adapter), G3/8″ - G1/2″
- Reducing Adapter (thread adapter), G3/8″ - G1/4″

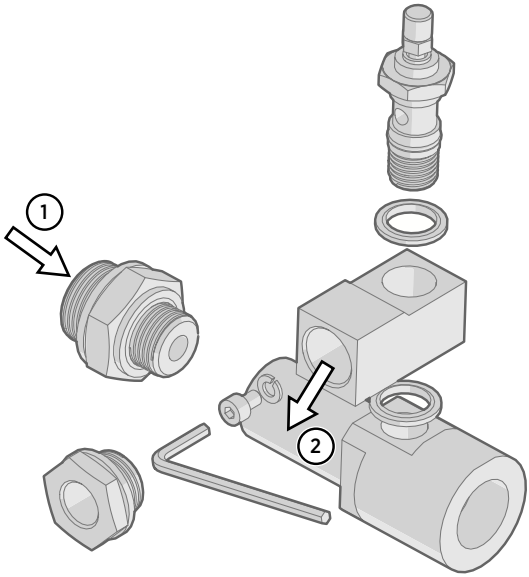

Figure 10 DSC74B

1 Gas goes in
2 Gas comes out

Figure 11 Removing the leak screw

4.6.5 DSC74C two-pressure sampling cell with coil

The DSC74C with an outlet coil is designed for the most critical measurements at atmospheric pressure. In the DSC74C, the coil is connected to the sampling cell outlet to protect the sensor from ambient humidity disturbing the measurement. The coil can also be used as a cooling coil for sampling from high temperature processes.

DSC74C parts are:

- Sampling cell, thread G3/8″
- Connection part with a needle valve and an integrated leak screw
- Reducing nipple (thread adapter), G3/8″ - G1/2″
- Reducing adapter (thread adapter), G3/8″ - G1/4″
- Diffusion coil (for measurements in atmospheric pressure)

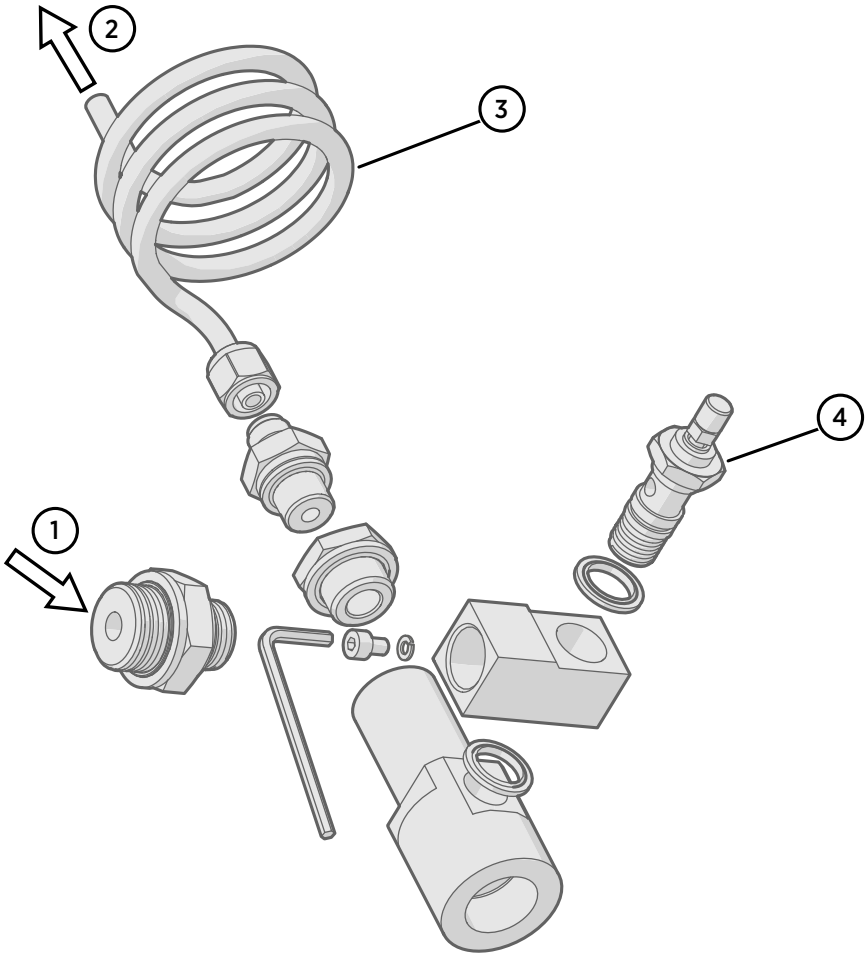

Figure 12 Default assembly of DSC74C

1 Gas goes in. The coil can also be used here.
2 Gas comes out
3 Coil
4 Valve

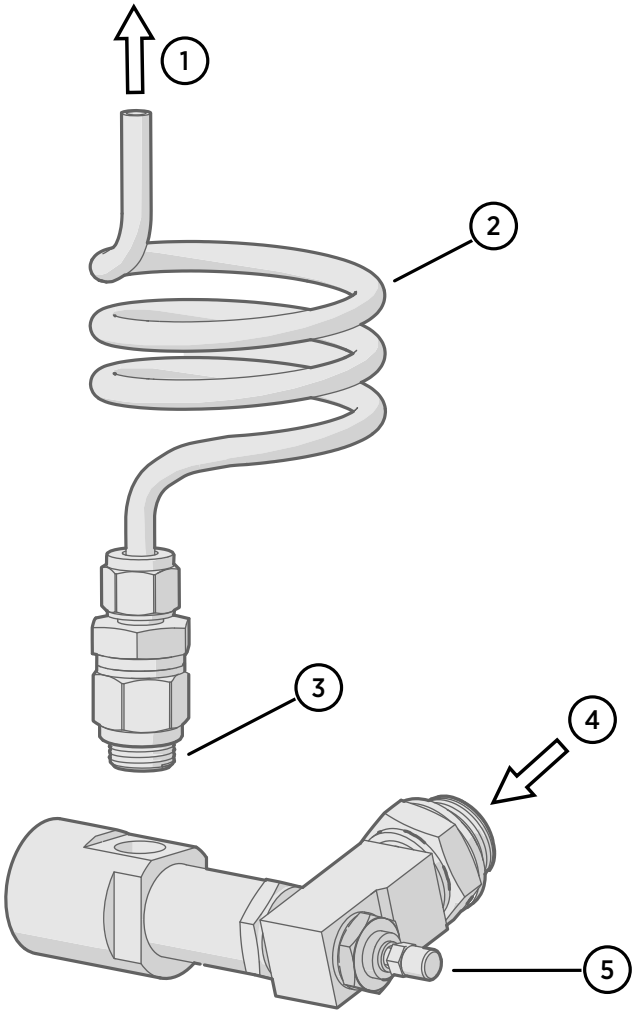

Figure 13 Alternative assembly of DSC74C (for tight spaces)

1 Gas comes out
2 Coil
3 Thread, max. size 7 mm
4 Gas goes in
5 Valve

The thread size cannot exceed 7 mm. Use the provided adapter to avoid damage to the transmitter.

4.6.6 NW40 mounting flange

An NW40 mounting flange (Vaisala order code 225220SP) is available for installations through thin chamber walls or into vacuum processes. The flange is compatible with ISO G1/2″ threaded transmitters.

> Vaisala does not provide the flange counterpart, only the attachment for DMT152.

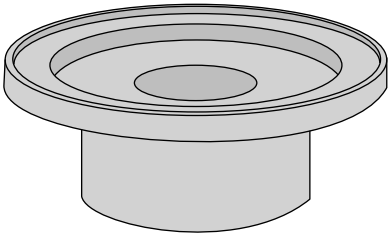

Figure 14 NW40 mounting flange

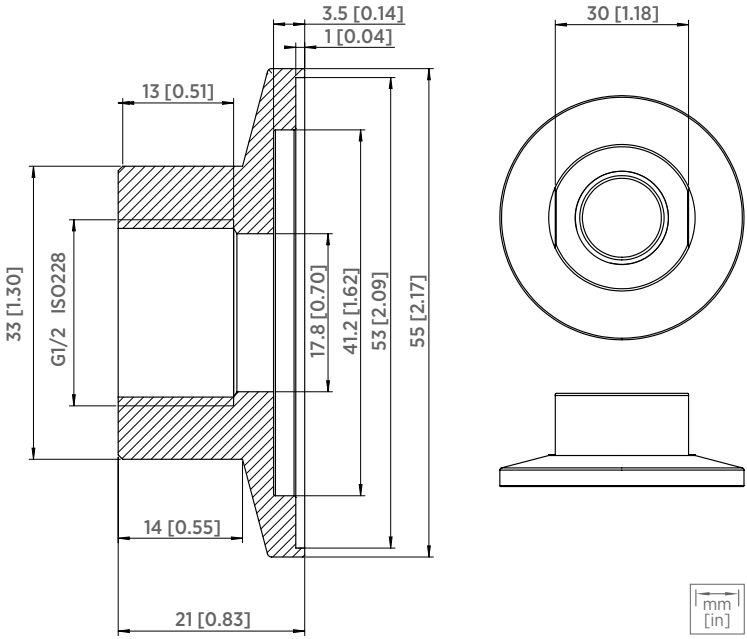

Figure 15 NW40 mounting flange dimensions

5. Serial line operation

5.1 Connecting to serial interface

DMT152 can be connected to a PC using the RS-485 line on Port II. You can use, for example, the USB serial interface cable (Vaisala order code 219690). The cable also provides enough operating power for transmitter configuration purposes from the USB port. For continuous measurement, it is recommended to supply the transmitter with operating power from another cable: see Power supply requirements (page 19).

If you have not used the DMT152 USB serial interface cable before, install the driver that came with the cable. See Installing driver for USB service cable (page 29) for detailed instructions.

5.1.1 Installing driver for USB service cable

Before taking the USB service cable into use, you must install the provided USB driver on your PC. When installing the driver, you must acknowledge any security prompts that may appear. The driver is compatible with Windows 7, Windows 8, and Windows 10.

1. Check that the USB service cable is not connected. Disconnect the cable if you have already connected it.
2. Insert the media that came with the cable, or download the driver from www.vaisala.com/software.
3. Execute the USB driver installation program (setup.exe), and accept the installation defaults. The installation of the driver may take several minutes.
4. After the driver has been installed, connect the USB service cable to a USB port on your PC. Windows will detect the new device, and use the driver automatically.
5. The installation has reserved a COM port for the cable. Verify the port number, and the status of the cable, using the **Vaisala USB Instrument Finder** program that has been installed in the Windows **Start** menu.

Windows will recognize each individual cable as a different device, and reserve a new COM port. Remember to use the correct port in the settings of your terminal program.

There is no reason to uninstall the driver for normal use. However, if you wish to remove the driver files and all Vaisala USB cable devices, you can do so by uninstalling the entry for **Vaisala USB Instrument Driver** in Windows **Control Panel**.

5.1.2 Terminal application settings

Table 7 Default serial interface settings

Property	Description/Value
Baud rate	19200
Parity	None

Property	Description/Value
Data bits	8
Stop bits	1
Flow control	None

The following steps describe how to connect to DMT152 using the PuTTY terminal application for Windows (available for download at www.vaisala.com/software) and a USB serial interface cable:

1. Connect the USB serial interface cable between your PC and the RS-485 port of DMT152 (connector II).
2. Start the PuTTY application.
3. Select the **Serial** settings category, and check that the correct COM port is selected in the **Serial line to connect to** field.

   You can check which port the USB cable is using with the **Vaisala USB Instrument Finder** program that has been installed in the Windows Start menu.

4. Check that the other serial settings are correct for your connection, and change if necessary. **Flow control** should be set to **None** unless you have a reason to change it.
5. Click the **Open** button to open the connection window and start using the serial line. If PuTTY is unable to open the serial port you selected, it will show you an error message instead. If this happens, restart PuTTY and check the settings.

6. You may need to adjust the **Local echo** setting in the **Terminal** category to see what you are typing on the serial line. To access the configuration screen while a session is running, click the right mouse button over the session window, and select **Change Settings...** from the pop-up menu.

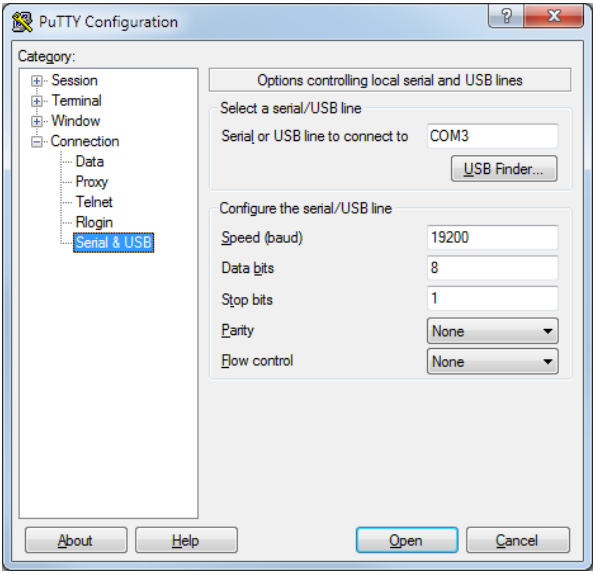

5.1.3 List of serial commands

All commands can be issued either in uppercase or lowercase. In the command examples, the keyboard input by the user is in **`bold`** type.

The notation <cr> refers to pressing the carriage return key (the **Enter** key) on your computer keyboard. Enter a <cr> to clear the command buffer before starting to enter commands.

Note that the term *quantity* in the serial interface corresponds to *measurement parameter*.

Table 8 List of serial commands

Command	Description
?	Show device information
??	Show device information (overrides **POLL** mode)
ACAL [1/2]	Calibrate analog channel
ADDR [0 ... 99]	Set the transmitter address for **POLL** mode
AERR	Set analog output device malfunction error mode
ALARM	Set analog output limit alarm modes

Command	Description
AMODE	Set analog output mode
AOVER [ON/OFF]	Allow analog outputs to exceed their range 10 %
ASEL	Configure analog output parameter and scaling
ATEST	Test analog outputs
CLOSE	Close the temporary connection and return the device to **POLL** mode
ERRS	Display the currently active errors
FORM	Change the format of the measurement output
FRESTORE	Restore factory settings
HELP	Display the command list
INTV [0 ... 255 S/MIN/H]	Set the continuous output interval (for **RUN** mode and **R** command)
LED	Set voltage for LED alarm (not needed with Vaisala LED cable)
MOL	Set the molar mass of the process gas (used in ppm_w calculation)
OPEN [0 ... 99]	Open temporary connection to a device that is in **POLL** mode
PRES	Set value for pressure compensation
R	Start the continuous outputting
RESET	Reset the transmitter
S	Stop the continuous outputting
SDELAY [0 ... 255]	Set response sending delay in milliseconds
SEND [0 ... 99]	Output readings once (specify address for transmitters in **POLL** mode)
SERI	Set the serial interface settings
SMODE [RUN/POLL/STOP]	Set the serial interface mode
STAT	Display transmitter status
STATUS	Set analog output purge status alarm
TIME	Set time for transmitter clock
UNIT	Select metric or non-metric units
VERS	Display transmitter software version
XPRES	Set value for pressure compensation (temporarily, is cleared at reset)
XPUR [ON/OFF]	Enable or disable sensor purge (temporarily, is enabled at reset)

5.2 Device information

5.2.1 Show device information

The **?** command outputs a listing of device information.

Table 9 ? command

Syntax	Description
?<cr>	Display device information.
??<cr>	Display device information in **POLL** mode.

Example:

```
?
?
DMT152/1.10
Serial number  : D1930026
Batch number   : D1330070
Module number  : ????????
Sensor number  : C1420000
Cal. date      : 20080512
Cal. info      : Vaisala/HEL
Serial mode    : STOP
Baud P D S     : 19200 N 8 1
Output interval:      1S
Address        :      0
Pressure       : 1.0132 bar
Filter         : 1.000
Ch1 output     : 0 ...  5 V
Ch2 output     : U ALARM
Ch1 Tdf  lo    :   -80.00 'C
Ch1 Tdf  hi    :    20.00 'C
Ch2 Tdf  lo    :     0.00 'C
Ch2 Tdf  hi    :     0.00 'C
```

If the transmitter is in **POLL** mode, but a connection has not been opened using the **OPEN** command, issue the **??** command. For a description of the serial interface modes, see Set serial line operating mode (page 43).

5.2.2 Show transmitter status

The **STAT** command displays the status of the transmitter in 4 characters.

The characters in the output have the following meaning:

[sensor purge] - [output frozen] - [settling] - [status]

During normal measurement all characters are zeroes. When purge is activated, output frozen, or the transmitter is in the settling period after sensor purge, the corresponding status character is **1**.

The final status character can have several values:
0 Normal status
1 Transmitter error
7 Retrying auto-calibration due to fluctuations in the supply voltage
9 Transmitter startup

Some example status codes:
0109 Transmitter performing startup procedure
1100 Sensor purge in progress, output frozen
1110 Settling period after purge, output frozen
0000 Normal measurement

Table 10 STAT command

Syntax	Description
STAT<cr>	Display the status of the transmitter in 4 characters.

Example:

```
STAT
0000
```

It is normal for measurement output to freeze temporarily if the measurement environment is changing rapidly.

5.2.3 Show firmware version

Table 11 VERS command

Syntax	Description
VERS<cr>	Display the transmitter firmware version number.

Example:

```
vers
DMT152 / 1.10
```

5.3 Configuring analog outputs

DMT152 has two analog output channels. These channels can function either as normal measurement channels, or produce an ON/OFF output if the measurement exceeds a given alarm level (limit alarm) or if the measurement reading is frozen (for example, during sensor purge).

- In the normal operation mode, a channel outputs voltage or current that corresponds to the reading of the selected measurement parameter.
- In the ON/OFF output mode, a channel outputs a specified voltage or current level. This mode is used by the limit alarm and the purge status alarm.
- In the LED alarm output mode, the channel outputs operation voltage for the LED cable. The LED will light up to indicate a frozen measurement output which is typically caused by transmitter start-up or sensor purge. The LED will blink at approximately 0.5 Hz if the malfunction alarm is active. The LED will not light up for the limit alarm.

Additionally, DMT152 has a malfunction alarm that is always enabled in normal operation mode. The malfunction alarm can also be enabled for a channel in ON/OFF output mode. See Malfunction alarm (page 38).

When the transmitter is ordered from Vaisala, the modes are configured as specified in the order form. You can change the operation settings after delivery using the **AMODE** command:

Table 12 AMODE command

Syntax	Description
AMODE [c1 c2]<cr>	**c1** = Channel 1 analog output mode. Available options are: 1 0 ... 20 mA 2 4 ... 20 mA 4 0 ... 5 V 5 0 ... 10 V 7 I alarm (ON/OFF output using current) 8 U alarm (ON/OFF output using voltage) Modes 1 ... 5 are normal measurement modes, where malfunction alarm is always enabled, and limit alarm and purge status alarm are disabled. **c2** = Channel 2 analog output mode. Available options are: 1 0 ... 20 mA 2 4 ... 20 mA 4 0 ... 5 V 5 0 ... 10 V 6 LED alarm 7 I alarm (ON/OFF output using current) 8 U alarm (ON/OFF output using voltage) Enable mode 6 for channel 2 if you are using the Vaisala LED cable.

Syntax	Description

Example:
`amode 2 1`
`Ch1 output : 4 ... 20 mA`
`Ch2 output : 0 ... 20 mA`	

5.3.1 Limit alarm

The limit alarm is activated when the measured parameter goes below the low limit or above the high limit. The alarm can be specified during ordering for a specified parameter, or configured on the serial line using the **ALARM** command.

When ordering a limit alarm, the alarm levels are set as follows:

- For current output, an active alarm is indicated by the current being at the maximum of the scale (20 mA).
- For voltage output, an active alarm is indicated by the voltage being at the maximum of the selected scale. For example, if the voltage output scale is 0 ... 5 V, an output of 5 V indicates the alarm is active.

Using the **ALARM** command, you can also set a hysteresis value to prevent the repeated triggering of the alarm when the measurement fluctuates around a limit value.

Table 13 ALARM command

Syntax	Description
ALARM ?<cr>	View the current alarm settings.
ALARM<cr>	Select at the prompt (**?**) whether the alarm is enabled or disabled and define the alarm limits.

Syntax	Description
The following example shows that a high limit alarm has been enabled for channel 1. If the measured value rises above the -40.00 °C T_d limit, analog channel 1 is set to 5 V (Limit Hi = -40.00, Level Hi = 5.00). The malfunction alarm (**aerr**) is disabled for both channels. Note that the term *quantity* in the serial interface corresponds to *measurement parameter*. **alarm ?** Channel 1: Low Limit : OFF High Limit : ON Aerr : OFF Quantity : Tdf Limit Lo : 0.00 Limit Hi : -40.00 Hysteresis : 0.00 Level Lo : 0.00 Level Hi : 5.00 Channel 2: Low Limit : OFF High Limit : OFF Aerr : OFF Quantity : ppm Limit Lo : 0.00 Limit Hi : 0.00 Hysteresis : 0.00 Level Lo : 0.00 Level Hi : 0.00	

Avoid enabling more than one alarm type for a channel.

5.3.2 Purge status alarm

The transmitter can temporarily freeze the output when measurement is not possible (for example, during sensor purge). The purge status alarm indicates this state by setting the analog output at a defined level, in the same way as the limit alarm (see Limit alarm (page 36)).

Use the **STATUS** command to enable/disable the alarm and to define the voltage/current levels (see example below). The channel is set to the value of **Level Hi** when sensor purge is active and to **Level Lo** during normal operation. During auto-calibration, the output is not frozen, that is, the output of the purge status alarm is on **Level Lo**.

Table 14 STATUS command

Syntax	Description
STATUS<cr>	Select at the prompt (**?**) whether the alarm is enabled or disabled and define the voltage/ current levels.

The following example shows the purge status alarm enabled for channel 1:

```
status
Channel 1:
Status          :       ON          ?
Level Lo        :     0.00          ?
Level Hi        :     5.00          ?
Channel 2:
Status          :      OFF          ?
Level Lo        :     0.00          ?
Level Hi        :     0.00          ?
```

Level Lo and **Level Hi** are shared between the **STATUS** and **ALARM** commands. For example, if you change the levels using the **ALARM** command, they will also change when viewing the **STATUS** command.

5.3.3 Malfunction alarm

If the transmitter is malfunctioning, the channel output is set to a pre-defined level. This overrides the normal measurement output of the channel. You can specify the level using the **AERR** command:

Table 15 AERR command

Syntax	Description
AERR<cr>	Enter the error output level at the prompt (**?**) for each channel.

Example:

```
aerr
Ch1 error out  :   20.000 mA ?
Ch2 error out  :    0.000 V  ?
```

The current value is shown after the colon "**:**". To set a new value, enter it after the question mark. The error output value must be within the valid range for the selected output mode.

> The error output value is displayed only when there are minor electrical faults such as a humidity sensor damage. When there is a severe device malfunction, the error output value is not necessarily shown.

The malfunction alarm is always enabled for channels that are in the normal measurement modes (see Configuring analog outputs (page 35)), but you can enable or disable it using the **ALARM** command for channels that are in the ON/OFF output mode.

5.3.4 Select analog output parameter and scaling

Use the **ASEL** command to select which measurement parameters the analog channels output. See Table 18 (page 41) for the selectable parameters. After entering the command, you will be prompted to enter the scaling of the parameters for both channels. Press the **Enter** key to accept the suggested scaling values.

Table 16 ASEL command

Syntax	Description
ASEL [xxx yyy]<cr>	xxx Analog channel 1 output parameter yyy Analog channel 2 output parameter

Example:

```
asel tdf ppm
Ch1 Tdf  lo    :   -80.00 'C ?
Ch1 Tdf  hi    :    20.00 'C ?
Ch2 ppm  lo    :     0.00 ppm ?
Ch2 ppm  hi    : 1000000.00 ppm ?
```

5.4 Configuring serial line operation

5.4.1 Set serial line settings

Use the **SERI** command to set the serial line settings. The new settings will be taken into use when the transmitter is reset or powered up. Note that the transmitter will use its default serial line settings if it is in error state; see Error state (page 57).

Also note that changing the serial line settings will slightly alter how the transmitter works with the MI70 indicator. If you are not using the default settings of **19200 N 8 1**, you will have to power off MI70 before it can find the transmitter (you cannot connect it on-the-fly).

Table 17 SERI command

Syntax	Description
SERI [b p d s]<cr>	B Baud rate (**300**, **600**, **1200**, **2400**, **4800**, **9600**, or **19200**) P Parity (**n** = none, **e** = even, **o** = odd) D Data bits (**7** or **8**) S Stop bits (**1** or **2**)

Syntax	Description

Example:
`seri 9600 e 7 1`
`Baud P D S : 9600 E 7 1`	

5.4.2 Set serial line response time

With the **SDELAY** command you can set the delay (response time) of the serial line, or view the currently set delay value.

SDELAY [delay]<cr>

Syntax	Description
SDELAY [delay]<cr>	**[delay]** = serial line delay, range 0 ... 255. One unit of delay corresponds to 4 milliseconds.

Example (set delay to 120 milliseconds):

```
sdelay 30
Serial delay   :        30
```

5.4.3 Set transmitter address

To operate in the **POLL** mode, the transmitter must have an address. If multiple transmitters share the same serial line, each transmitter must have a different address.

Syntax	Description
ADDR [address]<cr>	**[address]** = address, range 0 ... 99.

Example:
`addr`
`Address : 0 ?`	

5.4.4 Set measurement output format

Use the serial line command **FORM** to change the format or to select the measurement parameters for the output commands **SEND** and **R**. You can return to the default format using the **FORM /** command.

Syntax	Description
FORM [x]<cr>	**[x]** = formatter string The formatter string consists of parameters and modifiers. The maximum length of the form string is 74 characters. When entering the command, use the abbreviations of the parameters. The parameters are presented in Table 18 (page 41), and modifiers in Table 19 (page 41).
FORM /<cr>	Return to default format.

Example:

```
form 4.2 TDF #r #n
OK
```

```
form 3.1 “H2O= “ ppm “ “ U3 #r #n
OK
```

Table 18 FORM command parameters

Parameter	Description
TDF	Dew point / frost point temperature
PPM	Water content in parts per million
PPB	Water content in parts per billion
PPMW	Water content in parts per million by weight

For accurate ppm, ppb, or ppm_W reading, you must compensate for the pressure and molar mass of the process gas.

Table 19 FORM command modifiers

Modifier	Description
`x.y`	Length modifier (number of digits and decimal places)
`#t`	Tabulator
`#r`	Carriage return
`#n`	Line feed
`""`	String constant
`#xxx`	ASCII code value (decimal) of a special character; for example, `#027` for **Esc**

Modifier	Description
ADDR	Transmitter address with 2 characters (00 ... 99)
ERR	Currently active transmitter errors in a 9-bit field: bit0 ... bit8 • bit0 T MEAS error • bit1 F MEAS error • bit2 Voltage too low error • bit3 Voltage too low for mA output error • bit4 Ambient temperature error • bit5 Flash checksum error • bit6 Parameter checksum error • bit7 Autocalibration error • bit8 Internal error
SN	Transmitter serial number
STAT	Transmitter status in a 1-character field. Transmitter status in 4 characters. The status codes are the same as for the **STAT** command; see Show transmitter status (page 33).
TIME	Current time; see the description of the **TIME** command: Set time (page 51).
Ux	Shows the name of the measurement unit using "x" number of characters. For example, **U3** shows the name of the measurement unit with 3 characters

5.4.5 Select unit

DMT152 outputs dew point temperature T_d in either Celsius or Fahrenheit degrees depending on the unit selection. The unit selection also affects the unit (bar_a or psi_a) for the pressure compensation.

Table 20 UNIT command

Syntax	Description
UNIT [x]<cr>	**[x]** selects the unit type to output: • **m** = metric units (for example, Celsius) • **n** = nonmetric units (for example, Fahrenheit)
Example: **unit m** Units : Metric	

5.4.6 Set serial line operating mode

Table 21 SMODE command

Syntax	Description
SMODE **[xxx]**<cr>	**[xxx]** = select the serial line interface mode: • **STOP** • **RUN** • **POLL** See Table 22 (page 43) for a description of the serial modes.

Table 22 Selection of output modes

Mode	Measurement output	Available commands
STOP	Only with the **SEND** command.	All (default mode).
RUN	Automatic output.	Only command **S**.
POLL	Only with the **SEND** [addr] command.	**SEND** [addr] and **OPEN** [addr]. Other commands available after opening a line to the transmitter using the **OPEN** command.

The polling mode can be used when more than one transmitter is connected to one serial bus. When set to POLL state, the transmitters communicate one at a time when the specific transmitter address is called on the serial line. See the descriptions of **ADDR** command (Set transmitter address (page 40)) and **OPEN** command (Opening the transmitter in POLL mode (page 50)).

Selected output mode will be activated at next reset or power up.

Example:

```
smode poll
Serial mode    :     POLL
```

5.5 Configuring measurement parameters

5.5.1 Enable or disable sensor purge

You can temporarily disable the sensor purge function using the **XPUR** command. Note that disabling the sensor purge will affect the measurement performance of the transmitter.

Table 23 XPUR command

Syntax	Description
XPUR [ON/OFF]<cr>	**ON** = Enable sensor purge **OFF** = Disable sensor purge

Example:
`xpur off`
`Purge : OFF`	

After giving the **XPUR OFF** command, the transmitter will not perform a sensor purge until one of the following events takes place:

- Transmitter is reset or powered up
- Sensor purge is enabled using the **XPUR ON** command

5.5.2 Set pressure value for ppm calculation

The DRYCAP 180U sensor in DMT152 is not pressure-dependent. When measuring dew point, pressure compensation is not needed. However, in the calculation of ppm volume concentration, the pressure of the system must be known. If you did not specify pressure compensation when ordering the product, use the commands below to enable the pressure compensation and set the pressure value.

Table 24 PRES and XPRES command

Syntax	Description
PRES [pp.pppp]<cr>	**[pp.pppp]** = Absolute pressure in the measuring point. The unit is bar_a if metric units have been selected, and psi_a if non-metric units are used.
XPRES [pp.pppp]<cr>	**[pp.pppp]** = Absolute pressure in the measuring point. The unit is bar_a if metric units have been selected, and psi_a if non-metric units are used.
Use the **XPRES** command if the value is changed frequently. The value set using the **XPRES** command overrides the **PRES** value, but it is not retained at reset. When the **XPRES** value is set to 0, the last value set with **PRES** is used instead. The minimum valid pressure value for both the **PRES** and **XPRES** commands is 0.1 bar_a.	

Example:
`pres 1.01325`
`Pressure : 1.01325 bar`	

The pressure conversion coefficients from other pressure units to bars are given in Table 25 (page 45).

Table 25 Pressure conversion coefficients

From	To bar_a
PaN/m^2	0.00001
mmHg torr	0.001333224
inHg	0.03386388
mmH_2O	0.00009806650
inH_2O	0.002490889
atm	1.01325
at	0.980665
psi_a	0.06894757

Example:

29.9213 inHg = 29.9213 × 0.03386388 = 1.01325 bar_a

Conversions from mmHg and inHg are defined at 0 °C and from mmH_2O and inH_2O at 4 °C.

You can also set the pressure compensation value when you connect DMT152 to the MI70 indicator. When using MI70, the pressure unit is bar_a.

5.5.3 Set molar mass for ppm_w calculation

Use the **MOL** command to view and set the molar mass of the gas in the measurement environment. The molar mass parameter is used in calculating H_2O ppm_w. Some typical molar masses are:

Air 28.96 g/mol
N_2 28.0134 g/mol
O_2 32.00 g/mol
SF_6 146.06 g/mol

Table 26 MOL command

Syntax	Description
MOL [n]<cr>	**[n]** = Molar mass (in g/mol) of the gas in the measurement environment.

Examples:

```
mol 146.06
Mol            :       146.0600
```

```
mol
Mol            :       146.0600        ?
```

You can also set the molar mass when you connect DMT152 to the MI70 indicator.

5.6 Serial line output commands

5.6.1 Start measurement output

Use the **R** command to start the continuous outputting of measurement values as an ASCII text string to the serial line. The format of the measurement message is set with the **FORM** command.

Table 27 R command

Syntax	Description
r<cr>	Starts continuous measurement output.

Example:

```
r
Tdf= -2.5 'C        H2O=  4919 ppm
Tdf= -2.5 'C        H2O=  4918 ppm
Tdf= -2.5 'C        H2O=  4917 ppm
...
```

Outputting the results continues in intervals issued with the command **INTV**. You can stop the output by pressing the **Esc** key, or with the command **S**. Since the interface is half-duplex, you must enter the commands when the transmitter is not outputting.

5.6.2 Stop measurement output

You can stop the measurement output by pressing the **Esc** key, or with the **S** command:

S <cr>

5.6.3 Set output interval

Use the **INTV** command to change the output interval of the automatically repeating measurement messages. The measurement messages are repeated in the **RUN** mode, or after the **R** command has been given.

Table 28 INTV command

Syntax	Description
INTV [n xxx]<cr>	Set the output interval: n time interval = 0 ... 255 xxx time unit = **S**, **MIN**, or **H**

Example:
`intv 1 min`
`Output interval:  1 MIN`	

The shortest output interval (with n = 0) outputs the measurement messages as quickly as the transmitter's internal measurement cycle produces them, without additional delay.

5.6.4 Output a reading once

Use the **SEND** command to output a single measurement message. The output message is sent in the format that has been set using the **FORM** command.

Syntax	Description
SEND [address]<cr>	[address] = address of the transmitter, range 0 ... 99. Must be specified if the transmitter is in **POLL** mode, and a line has not been opened using the **OPEN** command.

Example:
`send`
`Tdf= -2.0 'C  H2O=  5152 ppm`	

5.7 Troubleshooting and maintenance commands

5.7.1 Display currently active errors

Use the **ERRS** command to display the currently active transmitter error codes. Possible errors and their causes are listed in Table 37 (page 58).

Table 29 ERRS command

Syntax	Description
ERRS<cr>	Displays the list of currently active error codes.

Example:
`errs`
`Voltage too low error`	

5.7.2 Test analog outputs

The operation of the analog outputs can be tested with the **ATEST** command by forcing the output to a given value which can then be measured with calibrated multimeter. The command uses the currently selected analog output types for the channels (voltage or current) so you do not have to specify the unit.

Before testing, you can verify the currently set analog output modes using the **AMODE** command. After testing the output, give the **ATEST** command again to exit the test mode.

Table 30 ATEST command

Syntax	Description
ATEST [xxx yyy]<cr>	Enter the test output values for channel 1 and channel 2. xxx Channel 1 output value (V or mA) yyy Channel 2 output value (V or mA)
The output shows the test values of the analog channels as well as diagnostic information that may be useful to Vaisala Service Center if there is a problem with the analog outputs.	

Syntax	Description
Examples:	

```
atest 1 15
1.00            2660
15.00          19425
```

```
atest
0.00       79
0.00       20110
```

5.7.3 Calibrate analog output

Use the **ACAL** command to force the analog outputs to the following values:

- Current output: 2 mA and 18 mA
- Voltage output: 10 % and 90 % of the range

After entering the **ACAL** command, use a calibrated current/voltage meter to measure the output, and enter the values. Note that the calibration is only valid for the currently selected analog output modes.

Table 31 ACAL command

Syntax	Description
ACAL [channel]<cr>	**[channel]** = Analog output channel: **1** or **2**
Example:	

```
acal 1
Ch1: I1 ( mA  ) ? 0.166
     I2 ( mA  ) ? 18.1
      3.61058569E+02     1.40927863E+03
```

5.7.4 Extend analog output range

Use the **AOVER** command to allow the analog output channels to exceed their specified range by 10 %. The scaling of the measurement parameter remains as before; the extra range is used for additional measurement range in the wet end.

Table 32 AOVER command

Syntax	Description
AOVER [ON/OFF]<cr>	**[channel]** = Analog output channel: **1** or **2**

Syntax	Description

Example:
`aover on`
`: ON`	

The following example illustrates how the analog output is affected. Channel 1 outputs T_d with voltage output 0 ... 5 V (-80 °C ... -30 °C). After giving the **AOVER ON** command, the range is 0 ... 5.5 V (-80 °C ... -25 °C). Note that the -30 °C T_d point is still at 5 V.	

5.8 Other commands

5.8.1 Opening the transmitter in POLL mode

Use the **OPEN** command to connect to a transmitter that is in **POLL** mode.

Table 33 OPEN command

Syntax	Description
OPEN [aa]<cr>	**[aa]** = address of the transmitter to connect to, range: 0 ... 99.

Example:
`open 1`
`DMT152  1 line opened for operator commands`	

5.8.2 Closing the connection to a transmitter in POLL mode

Use the **CLOSE** command to close a connection to a transmitter that is in **POLL** mode.

Table 34 CLOSE command

Syntax	Description
CLOSE<cr>	Closes the transmitter connection.

Example:
`close`
`line closed`	

5.8.3 Display command list

Use the **HELP** command to display the available commands.

help<cr>

5.8.4 Set time

Use the **TIME** command to view and set the transmitter clock. The clock does not have a battery backup – it is reset to 00:00:00 when the transmitter is powered up or reset.

Table 35 TIME command

Syntax	Description
TIME	Display the current time.
TIME [hh mm ss]<cr>	hh Hours (24-hour clock) mm Minutes ss Seconds
Examples: **time 12 30 00** 12:30:00 **time** 12:30:00	

5.8.5 Reset transmitter

When the **RESET** command is given, the transmitter will restart as if it had just been powered on. All transmitter settings are retained. The serial line mode of the transmitter will be set to the mode that was set using the **SMODE** command.

As the transmitter starts up, it performs the startup sensor purge and auto-calibration before resuming measurement.

RESET<cr>

5.8.6 Set LED voltage

With the **LED** command, you can set the supply voltage that is provided to the LED when the LED alarm mode is used. If you are using the Vaisala LED cable, leave this setting at the default voltage (2.80 V).

Table 36 LED command

Syntax	Description
LED<cr>	Enter the LED voltage at the prompt.

Example:
`led`
`Ch 1 Led Voltage : 2.80 V`
`Ch 2 Led Voltage : 2.80 V`	

5.8.7 Restore factory settings

Use the **FRESTORE** command to restore the factory settings to the transmitter.

FRESTORE<cr>

CAUTION! All user settings will be lost when you enter the **FRESTORE** command.

6. Maintenance

6.1 Cleaning the transmitter

The body of the transmitter can be cleaned by wiping with a moistened lint-free cloth. Do not immerse the transmitter in liquid and do not use cleaning agents or solvents. Do not attempt to clean the filter or the sensor element. If the filter is contaminated, replace it with a new one.

6.2 Changing the filter

If the filter is contaminated, it should be replaced. New filters can be ordered from Vaisala (order code 220957). Be careful when changing the filter, since it is easy to break the sensor when the filter is removed.

CAUTION! If the transmitter is installed in a pressurized chamber, always make sure that the pressure of the chamber is equalized with the ambient pressure prior to removing the transmitter. When the transmitter is removed for maintenance, cap the hole with a capped nut. This way, the process can be running although the transmitter is not in place.
Plugs are available from Vaisala for ISO threaded connections (Vaisala order code 218773) and NPT threaded connections (Vaisala order code 222507).

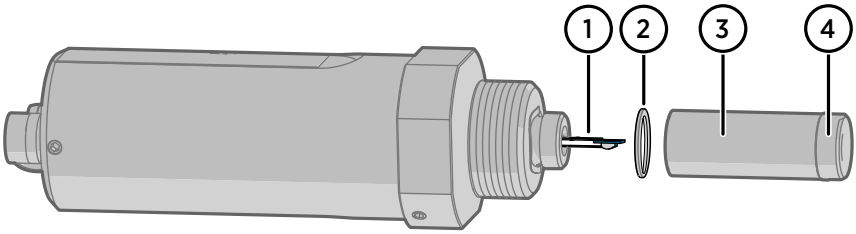

Figure 16 Filter structure

1 Vaisala DRYCAP sensor
2 Spring washer
3 Stainless steel mesh filter (do not touch)
4 Top of the filter

When replacing the filter, note the following:

- The pores of the steel mesh may become blocked if touched. Do not touch the filtering surface with your hands or any tools. Always handle the filter from the top of the filter body.
- Touching the filter with your fingers will also deposit oil and dirt on the filter, which may affect the measurement. Always handle the filter with gloved hands.

- When installing the transmitter after a filter change, always use a new sealing ring (ISO and UNF threads only).

Replace the filter as follows:

1. Grip the old filter from the top of the filter body using an 11 mm socket wrench. Turn the filter counterclockwise until it is loose.
2. Pull the filter straight out carefully; do not damage the sensor, and do not lose the spring washer.
3. Take the new filter, and insert it to the filter threads. The spring washer should be under the filter.
4. Tighten the new filter by turning it clockwise with the 11 mm socket wrench. Tighten to 5 Nm.

6.3 Calibration and adjustment

DMT152 is fully calibrated as shipped from the factory. The recommended calibration interval is 2 years. If the transmitter is used in the wet end of the measurement range, calibration should be done every year. Calibration should also be done if there is a reason to believe that the device is not within its accuracy specifications.

You can perform a simple field checking operation by comparing the readings of DMT152 and DM70 handheld dew point meter with a calibrated reference probe. For more information, see Field check using DM70 (page 54).

If there is need for calibration or adjustment, contact a Vaisala Service Center or your local Vaisala representative.

6.3.1 Field check using DM70

To check the accuracy of DMT152 in the field, you need the following equipment:

- A fully charged MI70 indicator (the measurement display that is included in the DM70 package).
- A calibrated reference probe that is suitable for the intended measurement environment and dew point range. You can use a DMP74 probe from the DM70 for dew point down to −60 °C (−76 °F), or a second DMT152 for full measurement range.
- A connection cable between the DMT152 and the MI70 indicator (Vaisala order code 219980).
- A reference environment with a stable dew point and temperature in a suitable range for both probes. The normal measurement environment of the transmitter can also be used, if it meets these criteria.

In the procedure described here, the readings of the probes are checked individually. You can also perform the field check so that you connect the reference probe simultaneously with the DMT152 you are checking. In this case, you need two connection cables if you are using a DMT152 also as the reference probe. Also, you must power one of the transmitters by other means than the MI70 indicator.

1. Place DMT152 in the reference environment (unless it is there already). You can perform the check even if DMT152 is currently being powered and used, as long as there is no cable connected to connector II.
2. Connect the MI70 connection cable between the MI70 indicator and connector II of DMT152.
3. Turn on the MI70 indicator. If the analog channels of your DMT152 are configured to use the current output, and if DMT152 is powered by MI70, you will see an error message that indicates the supply voltage is too low for running the actual analog output. This is expected behavior; press **OK** to acknowledge the error and continue the field check.

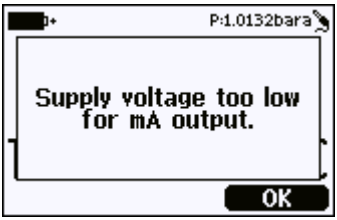

4. Check and adjust the environment settings if prompted. You can change the pressure compensation value (only needed for ppm calculation) and the molar mass of the measurement gas. The pressure must be entered in bar_a; to enter the value in psi_a, use the serial line. For more information on these settings, see the following sections:
   - Set pressure value for ppm calculation (page 44)
   - Set molar mass for ppm w calculation (page 45)
5. After a brief delay, DMT152 should provide an approximate measurement reading of the selected parameters. Remember that it takes up to 15 minutes for the transmitter to start the active measurement. If the desired parameters are not shown on the display, select them from the **Display – Quantities and units** menu.
6. The **Auto power off** function should be disabled on the MI70 indicator to prevent the indicator from powering off in the middle of the check. While waiting for the active measurement to start, check the setting in the **Settings - User Interface** menu, and change if necessary.
7. Write down the **Td** reading after the measurement has stabilized.
8. Turn off the MI70 indicator and disconnect DMT152.
9. Insert the reference probe to the measurement environment, and connect it to the MI70 indicator.
10. Turn on the MI70 indicator. Check and adjust the environment settings if prompted.

11. Wait for the reference probe to provide a stable reading, and compare it with the reading from DMT152.

The difference between the readings will give you an indication of the approximate drift of DMT152 and its need for calibration. As a general rule, the reading from DMT152 should be within ±4 °C T_d of the reading from the reference probe.

Some notes on using the MI70 indicator with the DMT152:

- If you disconnect DMT152 while the MI70 indicator is on, the parameters measured will remain on the screen, but no measurement will be shown.
- The messages from the transmitter (such as the supply voltage error) will appear in English even if MI70 has been set to another language.

7. Troubleshooting

7.1 Typical problems

If you have a problem with DMT152, first read the following sections concerning the behavior and error indications of the transmitter:

- Configuring analog outputs (page 35)
- Error state (page 57)
- Error codes (page 58)

Possible causes of errors include insufficient supply voltage, excessive supply voltage fluctuation, physical damage to the transmitter, and incorrect connections. Connection problems can be caused by misconfiguration of the analog outputs or the serial line. Also remember that the startup of the transmitter may take up to 15 minutes.

Some problems can be solved by simply resetting the transmitter. You can reset the transmitter by disconnecting the power or issuing the **RESET** command on the serial line.

If you cannot locate the source of the error and return the transmitter to the normal state, contact Vaisala technical support. See www.vaisala.com/support for more information.

7.2 Unknown serial settings

If you are not sure what the serial settings of your transmitter are, follow these steps to view and change the settings.

1. Make sure there are no other transmitters on the serial line.
2. Provide the transmitter with a 9 V supply voltage. This voltage is enough to start it in the error state.
3. Connect to the serial line using the error state serial line settings **19200 N 8 1**.
4. Give the **?** command to view the transmitter settings, including the serial settings and address. For an output example, see Show device information (page 33).
   You may have to give the command several times if there are characters in the buffer.
5. If necessary, set new serial line settings using the **SERI** command. For instructions on using the command, see Set serial line settings (page 39).

7.3 Error state

If the voltage supplied to DMT152 is too low for reliable operation, or fluctuates heavily, or there is some serious problem that prevents measurement, DMT152 will enter an error state. The error state is indicated by the following:

- Analog current output at 0 mA or 4 mA (according to selected range)
- Analog voltage output at 0 V

- Serial line outputs asterisk characters "*" instead of measurement data. For example:
  `Tdf=****** 'C H2O=****** ppm`

The analog output levels for the error state are configurable using the **AERR** command; see Malfunction alarm (page 38). Note that the asterisk characters on the serial line may also appear during the startup procedure. When the transmitter is in the error state, it will use the default serial interface settings, regardless of the currently set serial interface mode. If you have set a different mode with the **SERI** command, you will have to set your terminal program to the default settings of **`19200 N 8 1`** (see Terminal application settings (page 29)) before you can connect to the transmitter in error state.

7.4 Error codes

The transmitter has error codes that can be displayed on the serial line using the **ERRS** command. See section Display currently active errors (page 48).

Table 37 Error codes

Error code	Cause
Ambient temperature error	Ambient temperature out of operating range (probably too hot).
Autocal error	Transmitter unable to complete auto-calibration after several attempts. Can be caused by continuously changing measurement environment, problem with supply voltage, or transmitter malfunction.
Voltage error	Supplied operating voltage is too low or high for reliable operation, or there is a problem with voltage measurement.
Voltage too low error	Supplied operating voltage is too low for reliable operation.

Error code	Cause
Voltage too low for mA output error	Supplied operating voltage is too low for reliable operation of the analog current output. It is normal to receive this error when using the MI70 indicator or the USB serial interface cable, as they do not provide a sufficient operating voltage to operate the current output. To avoid this error, connect a power supply for the transmitter to connector I before connecting the MI70 indicator or USB cable. See Power supply requirements (page 19).
T meas error	Internal error, can be caused by damage to the sensor.
F meas error	Internal error, can be caused by damage to the sensor.
Internal error	Transmitter unable to function. Can be caused by transmitter malfunction or unsuitable measurement environment.
Parameter flash check sum error	Internal error
Program flash check sum error	Internal error
INFOA check sum error	Internal error
SCOEFS check sum error	Internal error
CURRENT check sum error	Internal error
Unknown error	Internal error

8. Technical data

8.1 Specifications

Table 38 Measurement performance

Property	Description/Value
Sensor	Vaisala DRYCAP® 180U Thin-film capacitive polymer sensor
Recommended calibration interval	2 years
Dew point temperature [1]	
Measurement range	−80 ... −20 °C (−112 ... −4 °F) T_d
Accuracy	
−80 ... −40 °C (−112 ... −40 °F)	±2 °C (3.6 °F) T_d
−40 ... −20 °C (−40 ... −4 °F)	±3 °C (5.4 °F) T_d
Non-calibrated range	−100 ... +20 °C (−148 ... +68 °F) T_d
Typical response time 63 % [90 %] at a gas temperature of +20 °C (+68 °F) and pressure of 1 bar:	
−20 ... −80 °C T_d	0.5 min [7.5 min]
−80 ... −20 °C T_d	2 s [5 s]
Typical long-term stability	Better than 2 °C (3.6 °F) / year
Analog output scalings	
Option 1	−80 ... +20 °C (−112 ... +68 °F) T_d
Option 2	−100 ... 0 °C (−148 ... +32 °F) T_d
Option 3	Free scaling
Concentration by volume (ppm)	
Measurement range (typical)	0 ... 500 ppm
Accuracy at +20 °C (+68 °F), 1013 mbar	±(0.2 ppm + 20 % of reading)

1) When the dew point is below 0 °C, the transmitter outputs frost point for T_d.

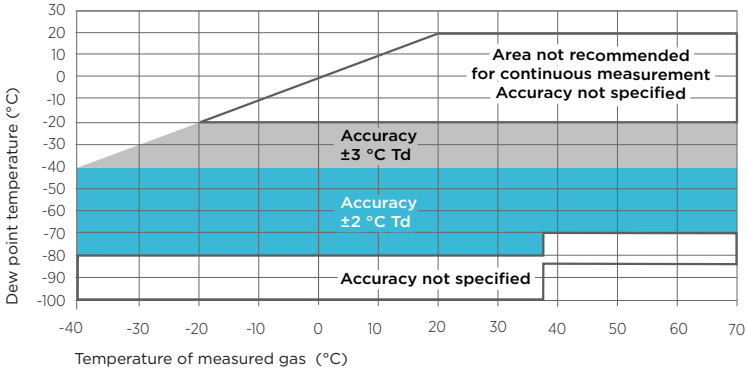

Figure 17 Accuracy over temperature range

Table 39 Operating environment

Property	Description/Value
Temperature	−40 ... +70 °C (−40 ... +158 °F)
Relative humidity	0 ... 100 %RH (up to +20 °C / +68 °F)
Pressure	0 ... 50 bar (725 psi_a)
Measurement environment	For air, nitrogen, argon, helium, and oxygen [1)] Not suitable for measurements in hydrogen or pure carbon dioxide
Sample flow rate	No effect on measurement accuracy
EMC compliance	EN61326-1, Industrial environment

1) *Consult Vaisala if other chemicals are present. Consider safety regulations with flammable gases.*

Table 40 Inputs and outputs

Property	Description/Value
Two analog outputs (scalable)	4 ... 20 mA, 0 ... 20 mA (3-wire) 0 ... 5 V, 0 ... 10 V
Digital output	RS-485 (2-wire)
Alarm-level indication by analog signal	User selectable
Purge information	5 V, 10 V, 20 mA, or LED
Accuracy of analog outputs	±0.01 V / ±0.01 mA

Property	Description/Value
ON/OFF output available instead of 2nd analog output	
Purge inactive	0 V or 4 mA
Purge active	5 V, 10 V, or 20 mA
OR exceeded T_d or ppm limit	User selectable
Typical temperature dependence	
Voltage output	±0.001 % of span / °C
Current output	±0.005 % of span / °C
Operating voltage	
RS-485 output	11 ... 28 VDC [1)]
Voltage output	15 ... 28 VDC [1)]
Current output	21 ... 28 VDC
Supply current	
Normal measurement	20 mA + load current
During self-diagnostics	Max. 220 mA pulsed
Supply voltage fluctuation	Max. 0.3 V
External load	
Voltage output	Min. 10 kΩ
Current output	Max. 500 Ω

1) *For extended temp. down to −40 °C (−40 °F) or pressure up to 50 bar (725 psia), the supply voltage is 21 ... 28 VDC.*

Table 41 Mechanical specifications

Property	Description/Value
Housing material (wetted parts)	AISI316L
Stainless steel mesh filter	Filter body AISI303, mesh AISI316L, grade 18 µm
Mechanical connections	ISO G1/2", NPT 1/2", UNF 3/4"- 16", UNF 5/8"-18"
IP rating	IP66
Storage temperature range	−40 ... +80 °C (−40 ... +176 °F)
Weight with different thread options	ISO thread: 190 g (6.70 oz) NPT thread: 210 g (7.41 oz) UNF thread: 186 g (6.56 oz)

Table 42 Output cable specifications

Property	Specification
Connector	Straight, moulded M8 female (IEC 60947-5-2)
Color	Black
Number of contacts	4
Conductors	0.25 mm^2 (× 4) / 0.00039 $inch^2$ (× 4)
Insulation	PVC
Cable diameter	5.0 mm / 0.2 in
Protection class	IP67 / NEMA 4
Wire color code	EN50044

8.2 Spare parts and accessories

Table 43 Accessories

Item	Order code
Connection cable for MI70 handheld indicator	219980
USB cable for PC connection	219690
Sealing ring set ISO (copper, 3 pcs)	221524SP
Sealing ring set UNF (copper, 3 pcs)	221563SP
Stainless steel mesh filter (18 µm)	220957SP
110 ... 240 VAC external power supply	POWER-1
Plug kit (ISO 1/2″)	218773
Plug kit (NPT 1/2″)	222507
Loop-powered external display (Nokeval 301)	226476
Loop-powered external display with relays (Nokeval 302)	234759
NW40 flange	225220SP
Analog/RS-485 output cables	
2 m (6,5 ft) cable, M8 snap-on connector	211598
3 m (9.8 ft) cable, Ch1 signal + Ch2 LED, M8 threaded connector	MP300LEDCBL

Item	Order code
0.32 m (1 ft) shielded cable, M8 threaded connector	HMP50Z032
3 m (9.8 ft) shielded cable, M8 threaded connector	HMP50Z30ASP
5 m (16.4 ft) shielded cable, M8 threaded connector	HMP50Z500SP
10 m (32.8 ft) shielded cable, M8 threaded connector	HMP50Z1000SP
Sampling cells (available for ISO G1/2")	
Basic sampling cell	DMT242SC
With Swagelok 1/4" male connectors	DMT242SC2
With a quick connector and leak screw	DSC74
Two-pressure sampling cell	DSC74B
Separate cooling/venting coil for sampling cells	DMCOIL

8.3 Dimensions

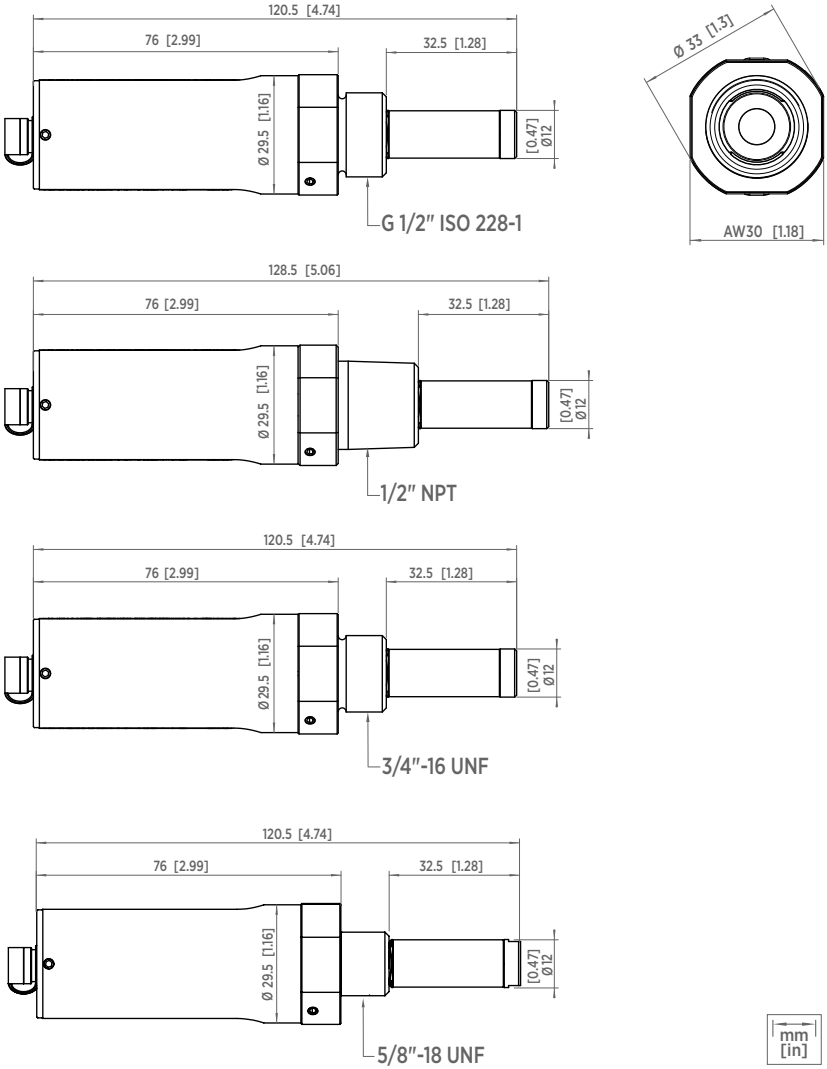

Figure 18 DMT152 dimensions

Warranty

For standard warranty terms and conditions, see www.vaisala.com/warranty.
Please observe that any such warranty may not be valid in case of damage due to normal wear and tear, exceptional operating conditions, negligent handling or installation, or unauthorized modifications. Please see the applicable supply contract or Conditions of Sale for details of the warranty for each product.

Technical support

Contact Vaisala technical support at helpdesk@vaisala.com. Provide at least the following supporting information as applicable:

- Product name, model, and serial number
- Software/Firmware version
- Name and location of the installation site
- Name and contact information of a technical person who can provide further information on the problem

For more information, see www.vaisala.com/support.

Recycling

Recycle all applicable material.

Follow the statutory regulations for disposing of the product and packaging.

VAISALA

www.vaisala.com

AKRIBIS · www.akribis.info · contacto@akribis.info