USER GUIDE

DMT143

Vaisala · Authorized Partner

Distributed by AKRIBIS

M211435EN-L

User Guide

Vaisala DRYCAP® Dew Point Transmitter

DMT143

VAISALA

AKRIBIS · www.akribis.info · contacto@akribis.info

PUBLISHED BY

Vaisala Oyj
Vanha Nurmijärventie 21, FI-01670 Vantaa, Finland
P.O. Box 26, FI-00421 Helsinki, Finland
+358 9 8949 1
vaisala.com
docs.vaisala.com

© Vaisala 2026

No part of this document may be reproduced, published, or publicly displayed in any form or by any means, electronic or mechanical (including photocopying), nor may its contents be modified, translated, adapted, sold, or disclosed to a third party without prior written permission of the copyright holder. Translated document and translated portions of the document are based on the original English version. Parts of the translation may have been created using machine-assisted translation. In ambiguous cases, the English version is applicable, not the translation.

The contents of this document are subject to change without prior notice.

Local rules and regulations applicable to the products and services may vary, and they shall take precedence over the information contained in this document. Vaisala makes no representations on this document's compliance with the local rules and regulations applicable at any given time, and hereby disclaims any and all responsibilities related thereto. You are instructed to confirm the applicability of the local rules and regulations and their effect on the intended use of the products and services.

This document does not create any legally binding obligations for Vaisala towards customers or end users. All legally binding obligations are set forth exclusively in the applicable contract or in the relevant set of General Conditions of Vaisala (vaisala.com/policies).

This product contains software developed by Vaisala or third parties. Use of the software is governed by license terms and conditions included in the applicable contract or, in the absence of separate license terms and conditions, by the General License Conditions of Vaisala Group.

Table of contents

1. About this document ... 9
1.1 Version information ... 9
1.2 Related manuals ... 11
1.3 Documentation conventions ... 11
1.4 Trademarks ... 12

2. Product overview ... 13
2.1 Introduction to DMT143 ... 13
2.2 Basic features and options ... 14
2.2.1 Connectivity to Vaisala Insight software ... 15
2.2.2 Connectivity to Indigo80 handheld indicator ... 15
2.3 DMT143 and DMT143L transmitter parts ... 16
2.3.1 DMT143 with ISO 228-1 G1/2″ thread ... 16
2.3.2 DMT143 with NPT thread ... 17
2.3.3 DMT143 with UNF thread ... 18
2.3.4 DMT143L with ISO 228-1 G1/2″ thread ... 19
2.4 Loop-powered display ... 19
2.5 Connection cables ... 21
2.6 Safety ... 21
2.6.1 ESD protection ... 21
2.7 Regulatory statements ... 22
2.7.1 FCC Part 15 compliance statement ... 22
2.7.2 Canada ICES-3 / NMB-3 compliance statement ... 22

3. Functional description ... 23
3.1 DRYCAP® technology ... 23
3.1.1 Autocalibration ... 23
3.1.2 Sensor purge ... 23
3.1.3 Sensor warming in high humidities and freezing conditions ... 24
3.2 DMT143 startup sequence ... 24
3.3 Alarm LED ... 25

4. Installation ... 27
4.1 Configuring transmitter before installation ... 27
4.2 Selecting location ... 27
4.3 Installing transmitter on pipeline ... 28
4.4 Installing transmitter on wall ... 30
4.5 Wiring ... 30
4.5.1 Power supply requirements ... 31
4.6 Sampling from a process ... 34

4.7 Sampling accessories 35
4.7.1 DMT242SC sampling cell 35
4.7.2 DMT242SC2 sampling cell with Swagelok connectors 35
4.7.3 DSCVCR14 sampling cell with 1/4″ Swagelok VCR connectors 36
4.7.4 DSC74 sampling cell with quick connector and leak screw 37
4.7.5 DSC74B and DSC74C sampling cells 38
4.7.6 DM240FA duct installation flange 41

5. Vaisala Insight PC software 43
5.1 Connecting to Insight software 43

6. Using transmitter with Indigo80 handheld indicator 45
6.1 Indigo80 handheld indicator 45
6.1.1 Device compatibility 45
6.1.2 Indigo80 keypad 46
6.1.3 Indigo80 main menu 46
6.2 Connecting to Indigo80 handheld indicator 46
6.3 Accessing transmitter settings with Indigo80 handheld indicator 49
6.4 Analog output configuration example 49

7. Modbus communication 51

8. Serial communication 52
8.1 Connecting to the serial interface 52
8.1.1 Transmitter startup 52
8.2 Installing driver for the USB service cable 52
8.3 Terminal application settings 53
8.4 Accessing serial interface in devices with Modbus output 55
8.5 List of serial commands 55
8.6 Device information 57
8.6.1 Show device information 57
8.6.2 Show analog output mode 57
8.6.3 Show firmware version 58
8.6.4 Show firmware information 58
8.6.5 Show currently active errors 58
8.6.6 Show serial number 59
8.6.7 Show command list 59
8.7 Configuring analog output 60
8.7.1 Set analog output parameters and scaling 60
8.7.2 Set analog output error notification 61
8.7.3 Extend analog output range 61
8.7.4 Test analog output 62
8.7.5 Enable or disable analog output 62

8.8 Serial line output commands....63
8.8.1 Start measurement output....63
8.8.2 Stop measurement output....63
8.8.3 Set output interval....63
8.8.4 Output a reading once....64
8.9 Configuring measurement parameters....64
8.9.1 Set measurement output format....64
8.9.2 Set measurement filtering....66
8.9.3 Set pressure compensation value....67
8.9.4 Select unit....68
8.9.5 View user adjustment parameters....68
8.9.6 Set user adjustment parameters....69
8.10 Configuring serial line operation....69
8.10.1 Set serial line operating mode....69
8.10.2 Set serial line settings....70
8.10.3 Set transmitter address....71
8.10.4 Set serial line response time....71
8.11 Other commands....72
8.11.1 Opening the transmitter in POLL mode....72
8.11.2 Closing the connection to a transmitter in POLL mode....72
8.11.3 Configure alarm LED....72
8.11.4 Reset transmitter....74
8.11.5 Restore factory settings....74

9. Maintenance....75
9.1 Periodic maintenance....75
9.1.1 Cleaning....75
9.1.2 Changing the filter....75
9.2 Calibration....76
9.2.1 Field check using Indigo80 handheld indicator....77
9.3 Repair maintenance....79

10. Troubleshooting....80
10.1 Solving typical problems....80
10.2 Error messages in Insight software....81
10.3 Unknown serial settings....82

11. Technical data....83
11.1 DMT143 specifications....83
11.2 DMT143L specifications....86
11.3 Dimensions....89
11.4 Spare parts and accessories....91

12. Vaisala services....93
12.1 Service centers....93
12.2 Technical support....93
12.3 Warranty....93

Appendix A: Modbus reference **94**
A.1 Default communication settings 94
A.2 Function codes 94
A.3 Data encoding 94
A.3.1 32-bit floating point or 32-bit integer format 94
A.3.2 16-bit integer format 95
A.4 Modbus registers 95
A.4.1 Measurement data registers 96
A.4.2 Configuration registers 96
A.4.3 Status registers 98
A.4.4 Test value registers 99
A.5 Device identification objects 99
A.6 Exception responses 100
A.7 Modbus communication examples 101

Recycling **103**

List of figures

Figure 1 DMT143 parts – model with ISO thread....16
Figure 2 DMT143 parts – model with NPT thread....17
Figure 3 DMT143 with UNF thread....18
Figure 4 DMT143L parts 19
Figure 5 Nokeval 301 loop-powered display....20
Figure 6 DMT143 startup sequence.... 25
Figure 7 Installing transmitter on wall....30
Figure 8 DMT143 digital and analog connectors....31
Figure 9 Wiring the digital connector....31
Figure 10 Wiring the analog connector....31
Figure 11 Example of current consumption during purge.... 33
Figure 12 Example of current consumption during autocalibration.... 34
Figure 13 DMT242SC sampling cell....35
Figure 14 DMT242SC2 sampling cell.... 35
Figure 15 DSCVCR14 sampling cell with 1/4″ Swagelok VCR connectors.... 36
Figure 16 DSC74 sampling cell with accessories....37
Figure 17 DSC74B sampling cell assembly for measurements at process pressure....38
Figure 18 Removing the leak screw....39
Figure 19 Setup with DSC74C for measurements at atmospheric pressure.....40
Figure 20 Alternative assembly of DSC74C for tight spaces, with DMCOIL used for cooling the sample....41
Figure 21 DM240FA with DMT143....42
Figure 22 Indigo80 handheld indicator.... 45
Figure 23 Indigo80 keypad.... 46
Figure 24 Indigo80 main menu....46
Figure 25 Connecting DMT143 transmitter to Indigo80 handheld indicator.....47
Figure 26 Dew point measurement accuracy vs. measurement conditions.....84
Figure 27 Accuracy with DRYCAP 180M sensor.... 87
Figure 28 Accuracy with DRYCAP 180S sensor.... 87
Figure 29 DMT143 with ISO 228-1 G1/2″ thread....89
Figure 30 DMT143 with 1/2″ NPT thread.... 90
Figure 31 DMT143 with 3/4″-16 UNF thread....90
Figure 32 DMT143 with 5/8″-18 UNF thread....90
Figure 33 DMT143L dimensions.... 91

List of tables

Table 1 Document versions (English)....10
Table 2 Related manuals....11
Table 3 DMT143 transmitter options....13
Table 4 Output parameters of DMT143....14
Table 5 Alarm LED states....25
Table 6 Connector pinouts....31
Table 7 Default Modbus serial communication settings....51
Table 8 Default serial interface settings....53
Table 9 List of serial commands....55
Table 10 ? command....57
Table 11 VERS command....58
Table 12 Error messages on ERRS command....59
Table 13 R command....63
Table 14 FORM command parameters....64
Table 15 FORM command modifiers....65
Table 16 Pressure conversion coefficients....67
Table 17 Selection of output modes....70
Table 18 Troubleshooting table....80
Table 19 Error messages in Insight software....81
Table 20 DMT143 measurement performance....83
Table 21 DMT143 operating environment....84
Table 22 DMT143 inputs and outputs....84
Table 23 DMT143 mechanical specifications....85
Table 24 DMT143 compliance....86
Table 25 DMT143L measurement performance....86
Table 26 DMT143L operating environment....87
Table 27 DMT143L inputs and outputs....88
Table 28 DMT143L mechanical specifications....88
Table 29 DMT143L compliance....89
Table 30 DMT143 spare parts and accessories....91
Table 31 Default Modbus serial communication settings....94
Table 32 Modbus function codes....94
Table 33 Interpretation of 16-bit signed integer values....95
Table 34 Modbus measurement data registers (read-only)....96
Table 35 Modbus configuration data registers (writable)....96
Table 36 Modbus status registers (read-only)....98
Table 37 Error codes on Modbus interface....98
Table 38 Modbus test registers (read-only)....99
Table 39 Device identification objects....99
Table 40 Modbus exception responses....100

1. About this document

1.1 Version information

This manual provides information for installing, operating, and maintaining Vaisala DRYCAP® Dew Point Transmitter DMT143.

For instructions on using the DMT143 transmitter with the discontinued Vaisala DM70 Handheld Dew Point Meter, see DMT143 User Guide revision M211435EN-K, available at docs.vaisala.com.

Table 1 Document versions (English)

Document code	Date	Description
M211435EN-L	January 2026	Updated content in this version: • References to the DM70 handheld dew point meter and the MI70 indicator replaced with references to the Indigo80 handheld indicator • Information about $T_{d/f}$ parameter added • Sampling accessories updated • Modbus register number notation updated • Information about Vaisala Services added Added sections: • DMT143 with UNF thread (page 18) • Installing transmitter on wall (page 30) • DSCVCR14 sampling cell with 1/4″ Swagelok VCR connectors (page 36) • DSC74B and DSC74C sampling cells (page 38) • Installing driver for the USB service cable (page 52) • Field check using Indigo80 handheld indicator (page 77) Updated sections: • Introduction to DMT143 (page 13) • Basic features and options (page 14) • Autocalibration (page 23) • Sensor warming in high humidities and freezing conditions (page 24) • Configuring transmitter before installation (page 27) • Selecting location (page 27) • Installing transmitter on pipeline (page 28) • Connecting to Indigo80 handheld indicator (page 46) • Accessing transmitter settings with Indigo80 handheld indicator (page 49) • Connecting to the serial interface (page 52) • Accessing serial interface in devices with Modbus output (page 55) • Calibration (page 76) • DMT143 specifications (page 83) • DMT143L specifications (page 86) • Spare parts and accessories (page 91) • Measurement data registers (page 96)

Document code	Date	Description
M211435EN-K	May 2023	Added sections: • Connectivity to Indigo80 handheld indicator (page 15) • Using transmitter with Indigo80 handheld indicator (page 45) • DMT143L specifications (page 86) Updated sections: • Safety (page 21) • Configuring transmitter before installation (page 27) • Wiring (page 30) • DSC74 sampling cell with quick connector and leak screw (page 37) • Set analog output parameters and scaling (page 60) • Set analog output error notification (page 61) • Set measurement output format (page 64) • DMT143 specifications (page 83) • Dimensions (page 89) • Measurement data registers (page 96)
M211435EN-J	February 2019	Modbus protocol added. Added information about Vaisala Insight PC software. Removed the TIME command. Added a cautionary note about changing stainless steel filter. Updated section *Troubleshooting*. Updated section *DMT143 Specifications*.

1.2 Related manuals

Table 2 Related manuals

Document code	Name
M212722EN	Vaisala Indigo80 Handheld Indicator User Guide
M211434EN	Vaisala DMT143 Dew Point Transmitter Quick Guide
M211634EN	Wiring Nokeval 201/301/302 Loop-Powered Displays with DMT143 and DMT152 Dew Point Transmitters (M211634EN)
M212904EN	Vaisala DMP80 Series Handheld Probes User Guide

1.3 Documentation conventions

WARNING! Alerts you to a serious hazard. If you do not read and follow instructions carefully at this point, there is a risk of injury or even death.

CAUTION! Alerts you to a potential hazard. If you do not read and follow instructions carefully at this point, the product could be damaged or important data could be lost.

Highlights important information on using the product.

Gives information for using the product more efficiently.

Lists tools needed to perform the task.

Indicates that you need to take some notes during the task.

1.4 Trademarks

Vaisala® and DRYCAP® are registered trademarks of Vaisala Oyj.

Windows® is either a registered trademark or trademark of Microsoft Corporation in the United States and other countries.

Modbus® is a registered trademark of Schneider Automation Inc.

All other product or company names that may be mentioned in this publication are trade names, trademarks, or registered trademarks of their respective owners.

2. Product overview

2.1 Introduction to DMT143

Vaisala DRYCAP® Dew Point Transmitter DMT143 is a small and lightweight dew point transmitter suitable for a wide range of OEM applications. DMT143 is easy to install and the mechanics have been designed for harsh environments requiring protection against dust, dirt, and splashed water.

There are 2 variants of the DMT143 transmitter, DMT143 and DMT143L. DMT143 and DMT143L offer different sensor, installation, and output options to meet the requirements of varying dew point measurement applications.

Table 3 DMT143 transmitter options

	DMT143 with DRYCAP 180D sensor	**DMT143L with DRYCAP 180M sensor**	**DMT143L with DRYCAP 180S sensor**
Mechanical connection	ISO 228-1 G1/2″ or NPT1/2″	ISO 228-1 G1/2″	ISO 228-1 G1/2″
Maximum dew point measurement range	−70 ... +60 °C (−94 ... +140 °F)	−70 ... + 60 °C° (−94 ... +140 °F)	−50 ... + 60 °C° (−58 ... +140 °F)
Dew point measurement accuracy	Up to ±2 °C (±5.4 °F) T_d in air or N_2	Up to ±2 °C (±5.4 °F) T_d in air or N_2	Up to ±2 °C (±5.4 °F) T_d in air or N_2
Operating pressure range	0–50 bar (0–725 psi), absolute	0–20 bar (0–290 psi), absolute [1)]	0–20 bar (0–290 psi), absolute [1)]
Analog output [2)]	Voltage (V): • 0–1 V • 0–5 V • 1–5 V Current (mA): • 4–20 mA	Current (mA) • 4–20 mA	Current (mA) • 4–20 mA
Digital output	RS-485 (non-isolated). Supported protocols: • Modbus RTU • Vaisala Industrial Protocol	RS-485 (non-isolated). Supported protocols: • Modbus RTU • Vaisala Industrial Protocol	RS-485 (non-isolated). Supported protocols: • Modbus RTU • Vaisala Industrial Protocol

1) *Mechanical durability up to 50 bar (725 psi)*
2) *One analog output channel, selectable when ordering the device. The analog output is not available in devices ordered with digital output only.*

The accuracies of the different sensors used in DMT143 and DMT143L have been optimized for different parts of the sensors' measurement ranges.

The DMT143 transmitters use the Vaisala DRYCAP polymer sensor for dew point measurement. DRYCAP technology has low maintenance needs due to its excellent long term stability and durability against condensation. The typical calibration interval of the DMT143 transmitters is 2 years.

Table 4 Output parameters of DMT143

Parameter	Abbreviation	Metric unit	Non-metric unit
Dew point/frost point temperature	$T_{d/f}$	°C	°F
Dew point/frost point temperature, converted to atmospheric pressure	$T_{d/f}$ atm	°C	°F
Dew point temperature	T_d	°C	°F
ppm moisture, by volume	H_2O	ppm	ppm

When dew point is below 0 °C, the transmitter outputs frost point for $T_{d/f}$. $T_{d/f}$ shows dew point temperature above the freezing point (0 °C/32 °F) and frost point temperature T_f (dew point over ice) below the freezing point. This is considered as the industry standard.
T_d shows dew point over water throughout the entire measurement range.

Dew point temperature in atmospheric pressure ($T_{d/f}$ atm) is a calculated parameter that presents the dew point the gas would have at atmospheric pressure. For this calculation to provide accurate results, it is important to have the correct pressure setting stored in the transmitter. This setting is specified on the order form, and it can be changed using the RS-485 line or the Indigo80 handheld indicator.

More information

- DMT143 and DMT143L transmitter parts (page 16)
- Using transmitter with Indigo80 handheld indicator (page 45)
- Modbus communication (page 51)
- Connecting to the serial interface (page 52)
- DMT143 specifications (page 83)

2.2 Basic features and options

- Configurable for optimum dew point measurement accuracy: Pressure compensation (fixed pressure setting or live pressure input through RS-485)
- LED for dew point level alarm and transmitter diagnostics

- DRYCAP polymer sensor:
  - Autocalibration ensures accuracy in changing measurement conditions
  - Sensor warming keeps the sensor dry in high humidity
  - Sensor purge ensures long term stability
- NIST traceable (certificate included)
- Field check suitability with Indigo80 handheld indicator
- Optional accessories:
  - Stainless steel grid filter for vacuum applications
  - Sampling cells with various installation options
  - Loop-powered external display
  - Connection cable for Indigo80 handheld indicator
  - Plastic shipping case to avoid contamination during shipping

More information

- Sampling accessories (page 35)
- Using transmitter with Indigo80 handheld indicator (page 45)
- DMT143 specifications (page 83)

2.2.1 Connectivity to Vaisala Insight software

The transmitter can be connected to Vaisala Insight software using a Vaisala USB service cable (item code 219690). With the Insight software, you can:

- See device information and status.
- See real-time measurement.
- Configure serial communication settings, filtering factor, alarm LED, and analog output parameters and scaling.

More information

- Connecting to Insight software (page 43)

2.2.2 Connectivity to Indigo80 handheld indicator

The transmitter can be connected to Vaisala Indigo80 handheld indicator using an M12 - M8 service cable (Vaisala item code 262195SP).

With the indicator, you can:

- See real-time measurements and device and status information
- Log measurement data
- Configure transmitter features and settings such as compensation setpoints, serial communication, and analog output.

More information

- Connecting to Indigo80 handheld indicator (page 46)

2.3 DMT143 and DMT143L transmitter parts

2.3.1 DMT143 with ISO 228-1 G1/2" thread

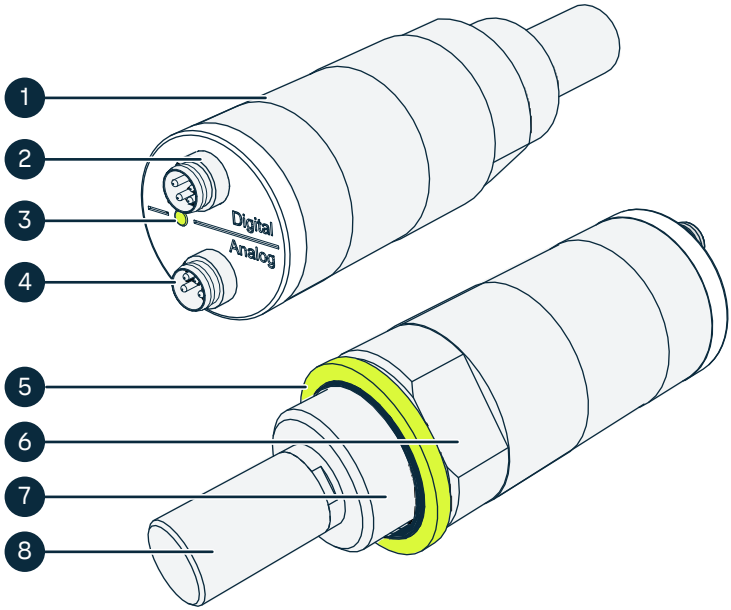

Figure 1 DMT143 parts – model with ISO thread

1 Transmitter body. Type label is applied here.
2 Digital output: non-isolated RS-485
3 Alarm LED
4 Analog output
5 Sealing ring. Must be used with the ISO 228-1 G1/2″ connection thread.
6 24-mm nut
7 Connection thread: ISO 228-1 G1/2″
8 DRYCAP 180D sensor protected with sintered filter

When the transmitter is delivered, the filter is protected by a yellow transport protection cap that keeps the sensor dry. The transport protection cap should be left on the transmitter during storage. Remove the transport protection cap before installing the transmitter.

2.3.2 DMT143 with NPT thread

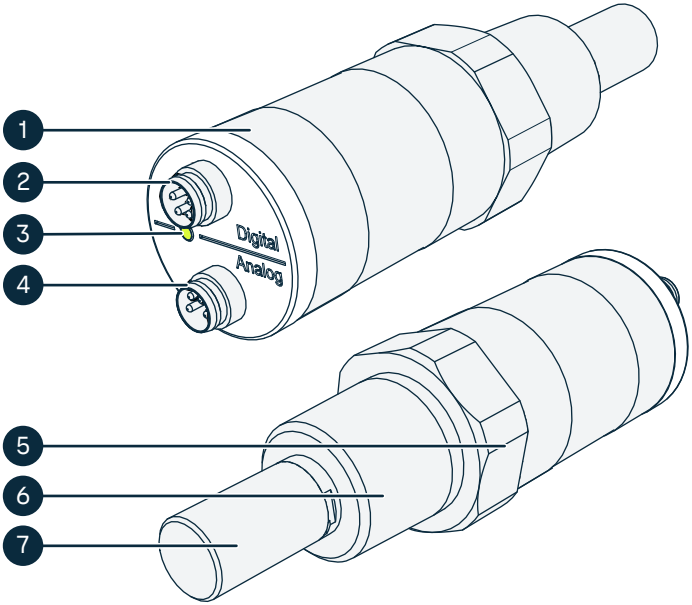

Figure 2 DMT143 parts – model with NPT thread

1 Transmitter body. Type label is applied here.
2 Digital output: non-isolated RS-485
3 Alarm LED
4 Analog output
5 30-mm nut
6 Connection thread: NPT 1/2″
7 DRYCAP 180D sensor protected with sintered filter

2.3.3 DMT143 with UNF thread

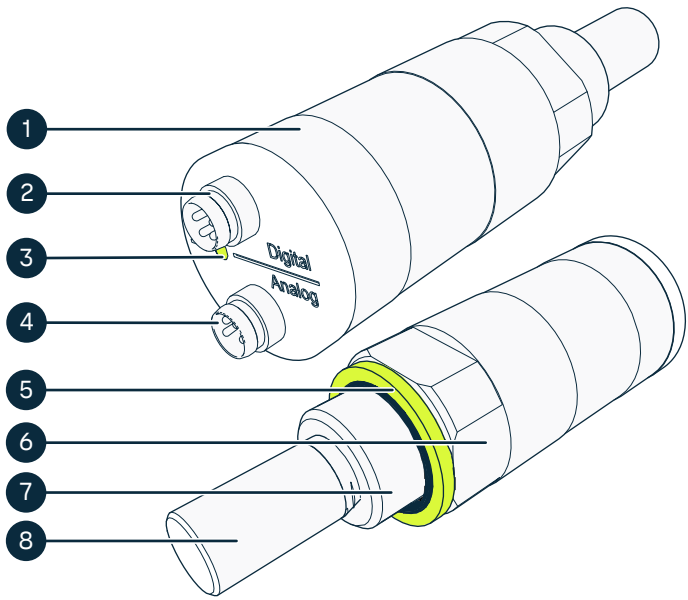

Figure 3 DMT143 with UNF thread

1 Transmitter body. Type label is applied here.
2 Digital output: non-isolated RS-485
3 Alarm LED
4 Analog output
5 Sealing ring. Must be used with the 3/4″-16 or 5/8″-18 UNF thread.
6 24-mm nut
7 Connection thread: 3/4″-16 or 5/8″-18 UNF thread
8 DRYCAP 180D sensor protected with sintered filter

2.3.4 DMT143L with ISO 228-1 G1/2" thread

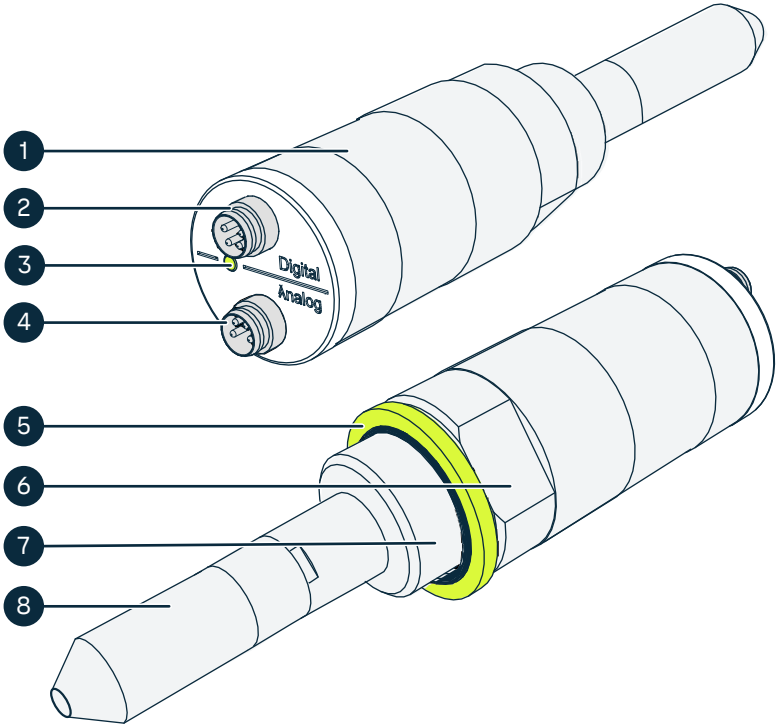

Figure 4 DMT143L parts

1 Transmitter body. Type label is applied here.
2 Digital output: non-isolated RS-485
3 Alarm LED
4 Analog output
5 Sealing ring. Must be used with the ISO 228-1 G1/2″ connection thread.
6 24 mm nut
7 Connection thread: ISO 228-1 G1/2″
8 DRYCAP 180M or DRYCAP 180S sensor protected with sintered filter

2.4 Loop-powered display

DMT143 can be connected to a loop-powered external LED display. The display provides a reading of the output parameter. The display is powered by the 4–20 mA current signal, so there is no need for an external power supply.

Two models are available:

- Nokeval 301
- Nokeval 302 (with alarm relays)

The display is delivered at its default settings. Configure the display functions and scaling according to the documentation delivered with the display. For a wiring example, see Wiring Nokeval 201/301/302 Loop-Powered Displays with DMT143 and DMT152 Dew Point Transmitters (M211634EN), available at docs.vaisala.com.

Figure 5 Nokeval 301 loop-powered display

The loop resistance of the display must be included in the loop resistance calculation for the complete current loop. For the loop resistance of the display, refer to the manufacturer's documentation.

More information

- Spare parts and accessories (page 91)

2.5 Connection cables

Vaisala supplies shielded cables with M8 female straight threaded connector, heavy duty cables, and cables for service and field check use. For more information, see the product offering at store.vaisala.com.

More information

- Spare parts and accessories (page 91)

2.6 Safety

This product has been tested for safety. Note the following precautions:

WARNING! DMT143 or DMT143L transmitters have not been designed for use in hazardous areas with potentially explosive atmospheres created by gases or ignitable dusts. Make sure no part of the transmitter is placed in a potentially explosive atmosphere.

CAUTION! The transmitter has not been tested for leakages, which may occur especially with small-molecule gases such as hydrogen and helium.

CAUTION! Do not modify the unit. Improper modification can damage the product or lead to malfunction.

CAUTION! The transmitter body does not have user serviceable parts inside, and is not designed to be opened. Opening the transmitter will void the warranty.

2.6.1 ESD protection

Electrostatic discharge (ESD) can damage electronic circuits. Vaisala products are adequately protected against ESD for their intended use. However, it is possible to damage the product by delivering electrostatic discharges when touching, removing, or inserting any objects in the equipment housing.

To avoid delivering high static voltages to the product:

- Handle ESD-sensitive components on a properly grounded and protected ESD workbench or by grounding yourself to the equipment chassis with a wrist strap and a resistive connection cord.

- If you are unable to take either precaution, touch a conductive part of the equipment chassis with your other hand before touching ESD-sensitive components.
- Hold component boards by the edges and avoid touching component contacts.

2.7 Regulatory statements

2.7.1 FCC Part 15 compliance statement

This equipment has been tested and found to comply with the limits for a Class B digital device, pursuant to Part 15 of the FCC rules. These limits are designed to provide reasonable protection against harmful interference in a residential installation. This equipment generates, uses and can radiate radio frequency energy and, if not installed and used in accordance with the instructions, may cause harmful interference to radio communications. However, there is no guarantee that the interference will not occur in a particular installation. If this equipment does cause harmful interference to radio or television reception, which can be determined by turning the equipment off and on, the user is encouraged to try to correct the interference by one or more of the following measures:

- Reorient or relocate the receiving antenna.
- Increase the separation between the equipment and receiver.
- Connect the equipment into an outlet on a circuit different from that to which the receiver is connected.
- Consult the dealer or an experienced radio/TV technician for help.

Changes or modifications to this equipment not expressly approved by the party responsible for compliance could void the user's authority to operate the equipment.

CAUTION! This device complies with part 15 of the FCC Rules. Operation is subject to the following two conditions: (1) This device may not cause harmful interference, and (2) this device must accept any interference received, including interference that may cause undesired operation.

2.7.2 Canada ICES-3 / NMB-3 compliance statement

This Class B digital apparatus complies with Canadian ICES-003.

Cet appareil numérique de classe B est conforme à la norme canadienne NMB-003.

3. Functional description

3.1 DRYCAP technology

Vaisala DRYCAP dew point measurement technology ensures accurate measurement with excellent long term stability. This results in very low maintenance requirements for the transmitter. The lasting performance is achieved with microprocessor technology and software that automatically performs self-diagnostic functions in addition to the normal dew point measurement. The self-diagnostic procedures that are conducted are called autocalibration, sensor purge, and sensor warming.

DMT143 and DMT143L use different versions of the Vaisala DRYCAP sensor:

- DMT143 uses the DRYCAP 180D sensor designed for applications such as plastic dryers and small industrial compressed air dryer (sensor filter length 22.5 mm, probe length 91.6 mm).
- DMT143L can be ordered with two versions of the DRYCAP180 sensor: either the 180M sensor designed for standard dry gas and desiccant dryer applications, or the 180S sensor designed for more humid applications such as refrigeration dryers. The sensor filter length of both DMT143L variants is 51 mm, probe length 120 mm.

3.1.1 Autocalibration

The autocalibration feature of the DMT143 transmitter is an automatic procedure which greatly reduces the possible drift in the dry end of the dew point measurement. It is performed at 1-hour intervals, and when the power is switched on. When measuring very dry conditions, the transmitter performs the autocalibration at shorter intervals. A significant change in dew point or temperature may also trigger the autocalibration.

During autocalibration the sensor is warmed for a short period (< 1 min) and the sensor capacitance values are evaluated at the elevated temperature. The possible dry end drift is then corrected to correspond to the calibrated values. During autocalibration the values of all available output parameters are locked (showing the latest valid value).

Autocalibration is carried out only if several criteria for the measurement environment are fulfilled. This ensures the reliability of the adjustments, and maintains the excellent long term stability that the patented technology offers. These criteria include for example a stable enough moisture level in the measured atmosphere. If the conditions are not fulfilled, the autocalibration function is postponed until satisfactory conditions are reached.

3.1.2 Sensor purge

Sensor purge is also an automatic procedure that minimizes the drift at the wet end readings of the dew point measurement. Sensor purge is performed once a day or when the power is switched on. The sensor is heated for several minutes which will then evaporate all excess molecules out of the sensor polymer. This, together with autocalibration, results in a very small drift of the sensor due to the very linear behavior of the polymer technology. During the sensor purge the transmitter outputs the T_d value prior to the procedure.

3.1.3 Sensor warming in high humidities and freezing conditions

DMT143 has a sensor warming feature that improves the sensor's performance in high humidities and freezing conditions. Sensor warming does not interrupt the transmitter's parameter value output.

In high humidity, sensor warming prevents the sensor and filter from becoming wet. High humidity may be present when the dew point temperature rises close to the gas temperature.

Sensor warming is switched on automatically when the humidity in the measured gas increases to a level where dew can start to form. The advantage of sensor warming is the rapid response of dew point measurement. A wet sensor and filter would otherwise result in a dew point equal to ambient temperature (that is, RH = 100 %).

If in spite of sensor warming the sensor gets soaked, it will recover fully back to normal operation after it dries out.

In freezing conditions, DMT143 uses sensor warming to maintain the sensor temperature above 0 °C.

When measuring in temperatures below 0 °C, the supply voltage must be 24–28 V DC.

More information

- Power supply requirements (page 31)

3.2 DMT143 startup sequence

When the transmitter is powered up, it performs the sequence (applicable from software version 1.1.5 onward) shown in Figure 6 (page 25). After a 2-second startup, the transmitter measures normally for 40 seconds, after which it performs the sensor purge and autocalibration functions. This can take up to 5 minutes, during which time the output is frozen: it displays the last measured values before the sensor purge began.

The autocalibration function can be postponed if the measurement environment is not suitable. For example, the environment may be changing rapidly or have too high humidity.

Normal operation and output is typically achieved no later than 6 minutes after startup. The sensor purge repeats every 24 hours (12 h default interval for the DMT143L variant with DRYCAP 180S sensor if used with purge), and autocalibration every hour. The output is frozen again for their duration.

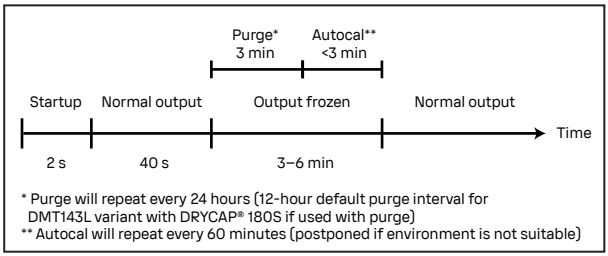

Figure 6 DMT143 startup sequence

The transmitter always performs this sequence when starting up. Keep the transmitter continuously powered to optimize its measurement performance and availability.

The DMT143L variant with DRYCAP 180S sensor can be used as a replacement of the DMT242 transmitter and ordered without the purge functionality. If you use purge with the DMT143L variant with DRYCAP 180S, the default purge interval is 12 hours.

More information

- DRYCAP technology (page 23)

3.3 Alarm LED

The alarm LED at the back of the transmitter provides a visual indication of the transmitter's status. The alarm LED functionality is preset at the factory according to order form. You can configure it as follows:

- You can use Vaisala Insight software or the **ALARM** command on the serial line to change the alarm limit, enable/disable the dew point alarm, or turn on/off the LED completely.
- You can change the alarm limit using the Indigo80 handheld indicator.

Table 5 Alarm LED states

LED color	Meaning
Not lit	Power off or LED functionality disabled.
Green	Power on, normal measurement.
Green and blinking	Purge or autocalibration in progress, measurement frozen.
Red	Dew point ($T_{d/f}$) above limit.

LED color	Meaning
Red and blinking	Transmitter error

More information

- Vaisala Insight PC software (page 43)
- Using transmitter with Indigo80 handheld indicator (page 45)
- Configure alarm LED (page 72)

4. Installation

4.1 Configuring transmitter before installation

You may wish to configure your transmitter before physically installing it. For easy access to configuration options, use either Vaisala Insight PC software with the USB service cable (item code 219690), or connect to the serial line using the USB service cable and a terminal program on a PC.

You can change all relevant configuration settings with Indigo80 handheld indicator and Vaisala Insight PC software.

Examples of configurable settings for analog output:

1. Analog output parameter and scaling.
2. Analog output error level.

Examples of configurable settings for RS-485 output:

1. By default, DMT143 transmitters are configured for single transmitter operation. Serial operation mode is **STOP** and address is **0**.
   To configure transmitters for operation on a common line, you must give each transmitter a unique address (range 0–255) and set their serial operation mode to POLL.
2. The default serial line settings may not be right for your RS-485 line.
3. You may need to change the transmitter's serial output format to suit your needs.

Examples of configurable settings for Modbus output:

1. The default serial settings for devices ordered for Modbus use are 19200,N,8,2. You may need to change them to match your Modbus system.
2. The default Modbus device ID is 240. You must change it to a unique value (range 1–247) if multiple devices are connected on the same bus.

More information

- Vaisala Insight PC software (page 43)
- Using transmitter with Indigo80 handheld indicator (page 45)
- Connecting to the serial interface (page 52)

4.2 Selecting location

It is important that the point of installation represents well the gas to be measured. Temperature changes do not affect the dew point measurement, but pressure changes will have an effect on the measurement. All leaks in the system must be eliminated to avoid ambient humidity affecting the measurement.

Direct installation to the measured gas is the recommended installation method if the temperature of the gas is suitable for DMT143 and no additional filtering is needed due to very dusty or oily gas. Oil as such is not harmful for the DRYCAP sensor, but response time may be slower if there are oil particles in the system, or if oil is collected to the filter over a longer period of time. The maximum measurement pressure for direct measurement is 20 bar (290 psi) or 50 bar (725 psi), absolute, depending on the transmitter model .

If the gas temperature is higher than the specified maximum operating temperature of the transmitter, gas sampling and cooling it to ambient temperature (for example, 20 °C / 68 °F) is recommended. Note that the dew point temperature must be clearly lower than the ambient temperature to avoid condensation in the sampling line. Sampling from the process is easy by using Vaisala sampling cell options.

DMT143 is light in weight, which means that it can be installed in a sample pipeline in the sampling cells without the need of any additional mechanical support. You can use a standard G1/2″ T-shaped pipe fitting (not available from Vaisala) when installing DMT143 into a pipeline.

You can also install DMT143 on a wall using a mounting bracket.

More information

- Sampling accessories (page 35)

4.3 Installing transmitter on pipeline

1. Remove the yellow transport protection cap from the transmitter.

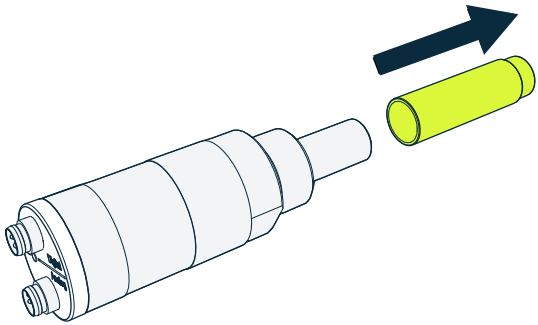

2. The DMT143 models with a parallel thread (ISO 228-1 G1/2″) or a UNF thread (3/4″-16 or 5/8″-18) require a sealing ring for a tight connection. Use the sealing ring that is provided with the transmitter. Make sure the threads on the mounting point match your transmitter.

   For the model with NPT thread, do not use a sealing ring.

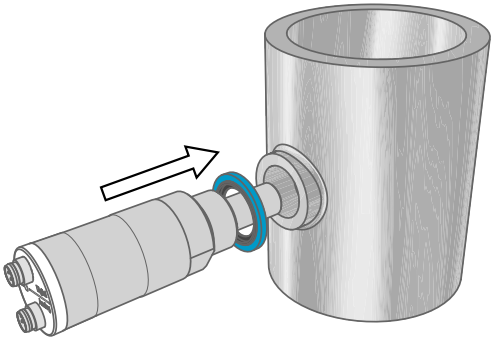

3. Tighten the connection by turning with a wrench (max. torque 50 Nm). Wrench size is 24 mm for ISO- and UNF-threaded transmitters, 30 mm for NPT-threaded model.

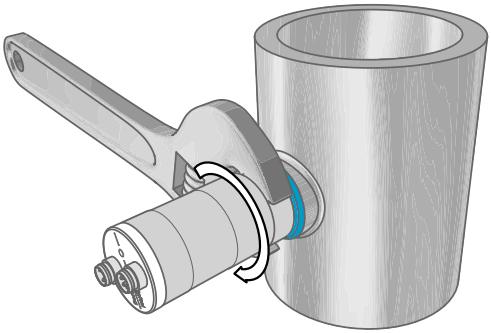

4. Connect the signal and power cable to DMT143.

More information

- Wiring (page 30)
- Power supply requirements (page 31)

4.4 Installing transmitter on wall

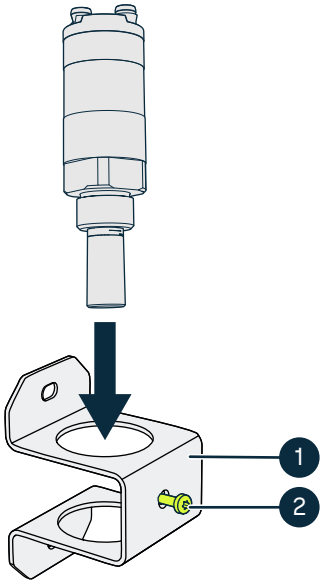

Figure 7 Installing transmitter on wall

1 Mounting bracket
2 Screw and self-clinching nut

1. Attach the mounting bracket (item code ASM216087SP) on the wall using plugs and screws that are suitable for the wall material.
2. Mount the transmitter on the mounting bracket.
3. Tighten the screw to keep the transmitter firmly in place.
4. Connect the signal and power cable to the transmitter.

4.5 Wiring

CAUTION! The power supply lines are internally connected. You can use either one of them, but do not connect more than one supply voltage in permanent installations. Temporary simultaneous use with the USB service cable or Indigo80 handheld indicator (which also supply power) is fine.

Table 6 Connector pinouts

Pin	Analog connector	Digital connector	Wire color
1	V DC supply+	V DC supply+	Brown
2	Ch-	RS-485 D0-	White
3	GND	GND	Blue
4	Ch+	RS-485 D1+	Black

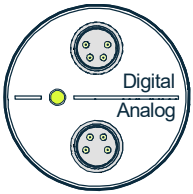

Figure 8 DMT143 digital and analog connectors

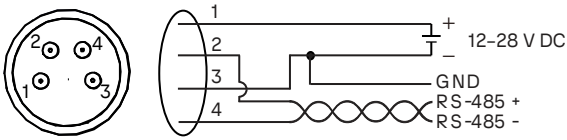

Figure 9 Wiring the digital connector

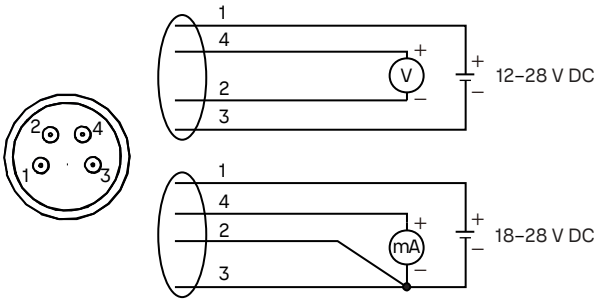

Figure 10 Wiring the analog connector

4.5.1 Power supply requirements

The minimum supply voltage required by the DMT143 transmitter depends on the analog output type that is used:

- For voltage output: 12–28 V DC.

- For current output: 18–28 V DC. The maximum load is 500 Ω.

The power supply should maintain the voltage for all load conditions.

If measuring in pressures above 20 bar (290 psi), absolute or temperatures below 0 °C, the supply voltage must be 24–28 V DC.

Current consumption during normal operation is <10 mA. The consumption increases during the sensor self-diagnostics (autocalibration and sensor purge). Typical current consumption is 220 mA pulsed current.

DMT143 can be powered by Indigo80 indicator or USB service cable. You can plug in Indigo80 or the USB service cable to the digital port while the transmitter is powered from the analog port.

The following figure shows a typical duty cycle during sensor purge at room temperature with 24 V DC supply voltage. Sensor purge current varies with supply voltage and operating temperature. The peak value is the highest in the lowest temperature.

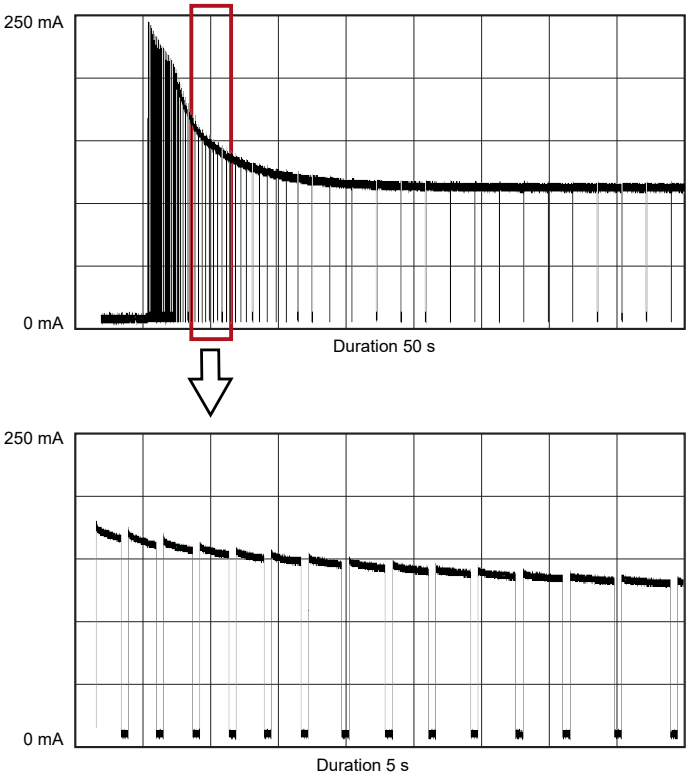

Figure 11 Example of current consumption during purge

The following figure shows a typical duty cycle during autocalibration at room temperature with 24 V DC supply voltage. Also the autocalibration current varies with supply voltage and operating temperature.

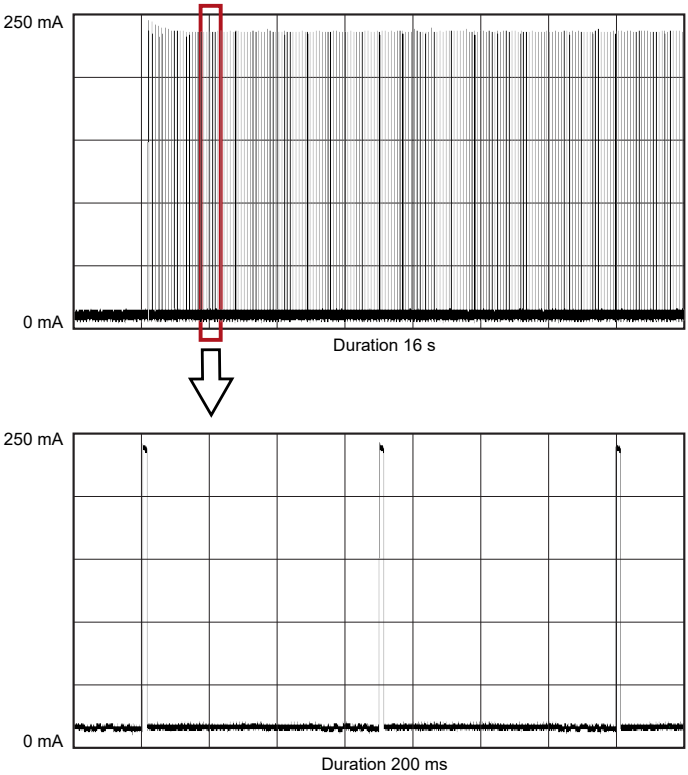

Figure 12 Example of current consumption during autocalibration

4.6 Sampling from a process

Sampling is needed when direct measurement of the air or gas is not possible or desirable. This may be related to, for example, a high process temperature, protecting the sensor from water spikes, the need to easily detach the instrument from a pressurized process without running the whole process down, or wanting to make the measurement at a more convenient location.

It is important to keep in mind that changing the pressure of a gas changes the dew point temperature of the gas. If the sensor is at a different pressure than the process itself, there may be an error of several tens of degrees in the dew point measurement.

Make sure there is sufficient flow of gas to the sensor (for example, 1 l/min) to give a representative sample.

To simulate the effect of pressure change to dew point, you can use the Vaisala Humidity Calculator at vaisala.com/humiditycalculator.

4.7 Sampling accessories

4.7.1 DMT242SC sampling cell

DMT242SC is a basic sampling cell with only the main sampling cell body. The inlet and outlet are female threaded sample connectors (inlet ISO G3/8″, outlet ISO G1/4″). The flow direction can be reversed, if needed. Figure 13 (page 35) shows the default direction.

DMT242SC is suitable for users requiring only a sampling cell to fit the measurement probe or transmitter into and doing further assembly (piping into inlet and outlet, valves, possible flow meter) by themselves.

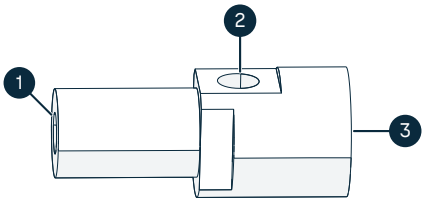

Figure 13 DMT242SC sampling cell

1 Gas inlet, ISO G3/8″
2 Gas outlet, ISO G1/4″
3 Connection point for probe/ transmitter, ISO G1/2″

4.7.2 DMT242SC2 sampling cell with Swagelok connectors

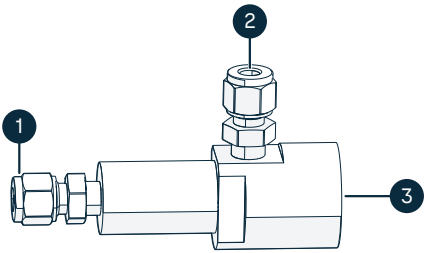

Figure 14 DMT242SC2 sampling cell

1 Gas inlet, 1/4″ Swagelok connector (two-ferrule)
2 Gas outlet, 1/4″ Swagelok connector (two-ferrule)
3 Connection point for probe/ transmitter, ISO G1/2″

For easy installation, the DMT242SC2 sampling cell includes welded Swagelok connectors at both the inlet and outlet. The connectors fit directly to 1/4″ tubing with Swagelok's two-ferrule mechanical grip design.

To fit 6-mm tubing to the connectors, an adapter such as Swagelok Reducer SS-6M0-R-4 (not supplied by Vaisala) can be used.

DMT242SC2 is the suitable choice in, for example, plastics drying systems, where the measurement is made by tapping off the dryer system and bringing a small air stream to the sensor.

The Swagelok connectors of DMT242SC2 connect easily to a cooling coil or tubing, providing the essential function of cooling the dry air to ambient temperature before it reaches the sensor.

4.7.3 DSCVCR14 sampling cell with 1/4" Swagelok VCR connectors

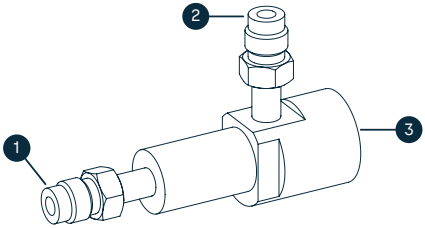

Figure 15 DSCVCR14 sampling cell with 1/4″ Swagelok VCR connectors

1 Gas inlet, 1/4″ Swagelok VCR connector
2 Gas outlet, 1/4″ Swagelok VCR connector
3 Connection point for probe/ transmitter, ISO G1/2″

For easy installation, the DSCVCR14 sampling cell includes welded Swagelok VCR metal gasket face seal fittings at both the inlet and outlet. The 1/4″ VCR end connections enable a reliable, metal-to-metal, make-and-break seal suitable for high-purity welded systems.

DSCVCR14 is a suitable choice for high-purity gas lines and applications requiring high cleanliness, such as semiconductor manufacturing and ultra-high-purity gas distribution. VCR connections are designed to be reassembled with a fresh metal gasket, so the DSCVCR14 is particularly well suited for installations that may need to be modified or reconfigured over time.

4.7.4 DSC74 sampling cell with quick connector and leak screw

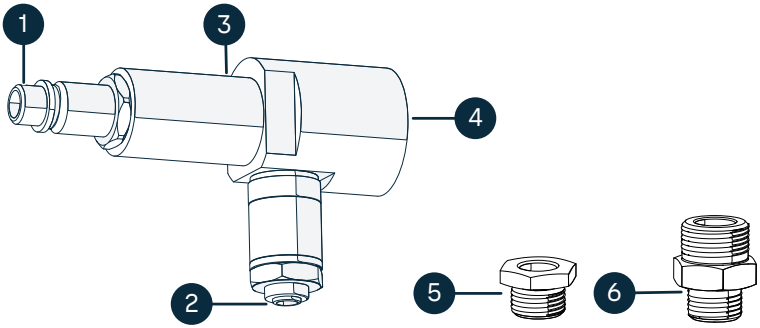

Figure 16 DSC74 sampling cell with accessories

1 Quick connector
2 Leak screw
3 Sampling cell body (DMT242SC)
4 Connection point for probe/transmitter, ISO G1/2″
5 Thread adapter, type G3/8″ - G1/4″
6 Thread adapter, type R3/8″ - R1/2″

The DSC74 has been designed especially for compressed air lines. The sampling cell contains an adjustable leak screw that maintains process pressure while allowing airflow past the sensor for a representative measurement.

The leak screw is opened and closed with a screwdriver. The leak screw should be 1/2 turn open. This can be verified by first closing the leak screw, then turning 1/2 turn to open it. The air coming out will make a barely audible hiss and can be lightly felt when putting a hand in front of the air stream.

> Do not open the leak screw more than 1/2 turn to avoid reducing the pressure in the sampling cell.

The DSC74 comes with a quick connector that fits to industry standard compressed air line connectors (suitable for type D, Quick08, NIP08). This allows for easy installation and detachment of the dew point transmitter without having to shut down the process. Alternative ways to connect are through the two different thread adapters (R3/8″ to R1/2″ and G3/8″ to G1/4″ ISO) that are supplied with each DSC74 unit.

When using the DSC74, seal the threads of the quick connector or thread adapter carefully with PTFE thread seal tape. Tighten with an open-end wrench.

4.7.5 DSC74B and DSC74C sampling cells

The DSC74B and DSC74C sampling cells are enhanced versions of the DSC74. The body is designed in a way that it is possible to measure at both process and atmospheric pressure.

4.7.5.1 DSC74B two-pressure sampling cell

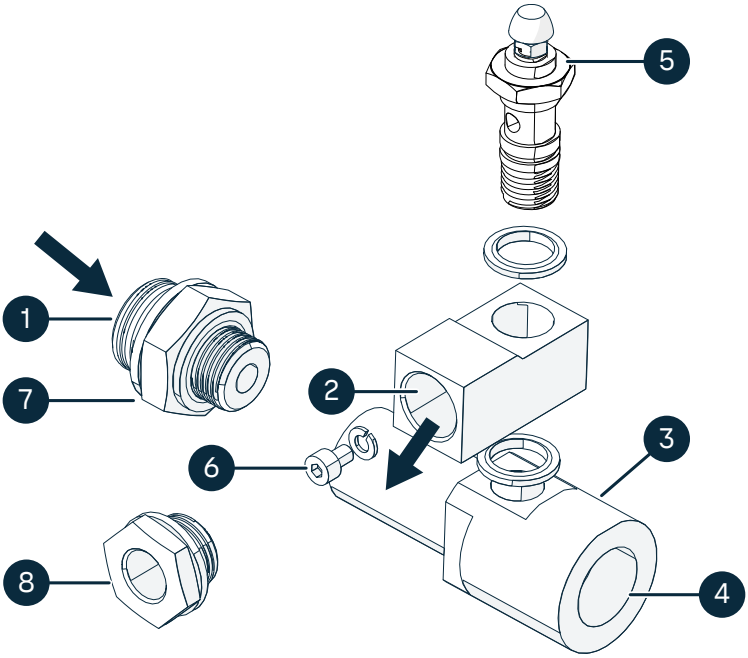

Figure 17 DSC74B sampling cell assembly for measurements at process pressure

1 Gas inlet
2 Gas outlet
3 Sampling cell body
4 Connection point for probe/transmitter, ISO G1/2″
5 Valve (flow regulator)
6 Integrated leak screw
7 Reducing nipple (thread adapter), G3/8″ - G1/2″
8 Reducing adapter (thread adapter), G3/8″ - G1/4″

The DSC74B sampling cell assembly limits the flow rate with a fixed leak screw. The flow is optimized for pressures 3 ... 10 bar (43.5 ... 145 psi), gauge. The fixed leak screw eliminates the risk of opening the leak screw fully by accident and this way emptying a gas vessel. The maximum flow can be increased, if needed, by removing the leak screw and adjusting the flow manually with the valve.

In the basic operation of the DSC74B, the gas flows to the sensor from the front and the outlet is on the side. To have the measurement done at atmospheric pressure, the inlet and outlet are reversed. Then the reducing parts supplied (G3/8″ - G1/2″ or G3/8″ - G1/4″) on the outlet side help to protect the sensor from ambient humidity coming in.

Figure 18 Removing the leak screw

4.7.5.2 DSC74C two-pressure sampling cell with coil

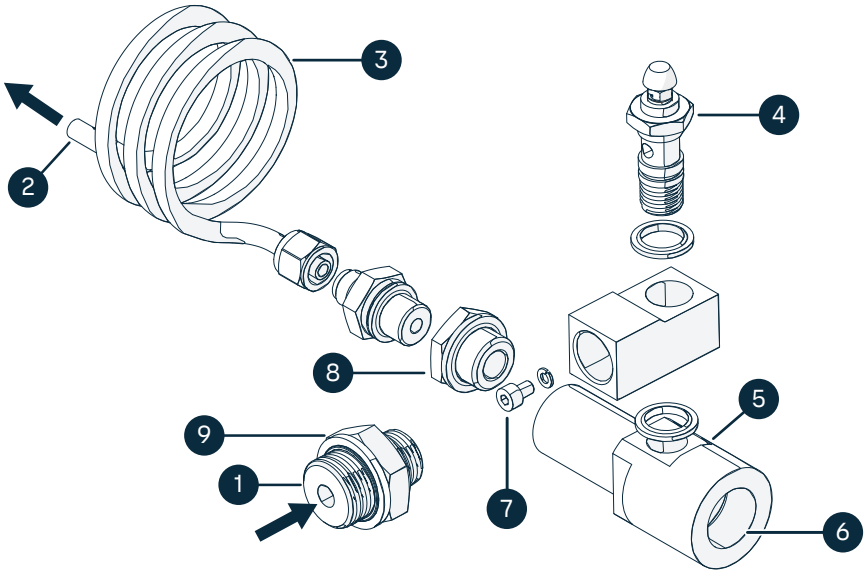

Figure 19 Setup with DSC74C for measurements at atmospheric pressure

1 Gas inlet. The coil can also be used here.
2 Gas outlet
3 DMCOIL used as venting coil
4 Valve (flow regulator)
5 Sampling cell body
6 Connection point for probe/transmitter, ISO G1/2″
7 Integrated leak screw
8 Reducing nipple (thread adapter), G3/8″ - G1/4″
9 Reducing nipple (thread adapter), G3/8″ - G1/2″

The DSC74C sampling cell consists of the DSC74B sampling cell and the DMCOIL cooling/venting coil. DSC74C is designed for the most demanding measurements at atmospheric pressure.

The coil acts as a venting coil in the gas outlet (Figure 19 (page 40)) to prevent ambient humidity from disturbing low dew point measurements in applications where the gas pressure is reduced to ambient pressure before entering the sampling cell.

When sampling from high-temperature processes, the coil can be used at the gas inlet to cool down the sample gas before it reaches the sensor (Figure 20 (page 41)).

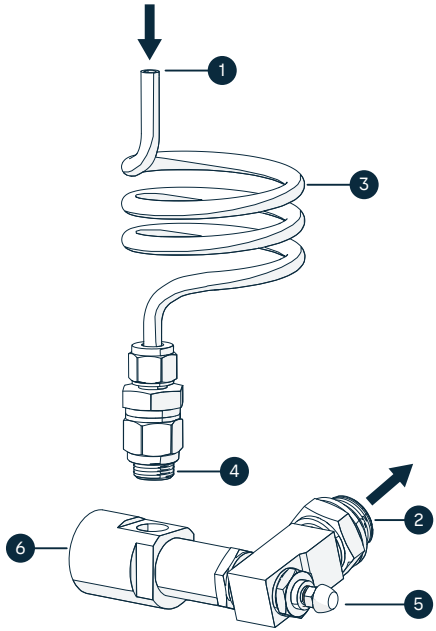

Figure 20 Alternative assembly of DSC74C for tight spaces, with DMCOIL used for cooling the sample

1 Gas inlet
2 Gas outlet
3 DMCOIL used as cooling coil
4 Thread, max. size 7 mm. Use the provided adapter to avoid damage to the measurement probe/transmitter.
5 Valve (flow regulator)
6 Connection point for probe/transmitter, ISO G1/2″

4.7.6 DM240FA duct installation flange

DMT143 models with a ISO 228-1 G1/2″ connection thread can be installed directly in the process wall through a DM240FA duct installation flange. When the transmitter is installed directly on the process wall or pipe, note that a closing valve may be needed on both sides of the installed transmitter so that the sensor head can be removed from the process for calibration or maintenance.

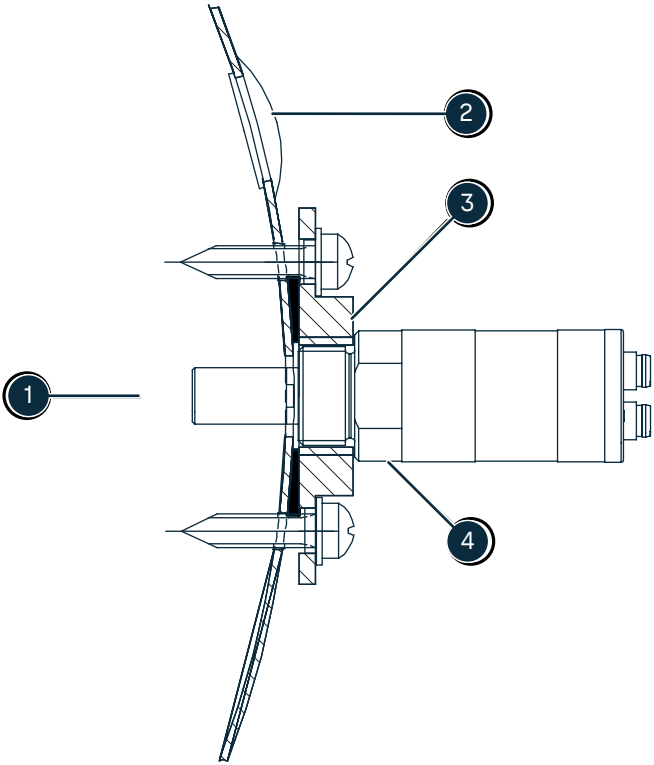

Figure 21 DM240FA with DMT143

1 Measured gas
2 Recommended additional hole (plugged) for T_d field check reference measurement probe (for example, Vaisala DMP80B)
3 DM240FA flange (thread ISO 228-1 G1/2″)
4 DMT143 transmitter

5. Vaisala Insight PC software

You can use Vaisala Insight PC software to check and configure DMT143 transmitters intuitively, without typing any serial commands. The software guides you when changing the settings on the transmitter. The transmitter can be connected to Insight software using a Vaisala USB service cable (item code 219690).

With the Insight software, you can:

- See device information and status.
- See real-time measurement.
- Configure serial communication settings, filtering factor, alarm LED, and analog output parameters and scaling.

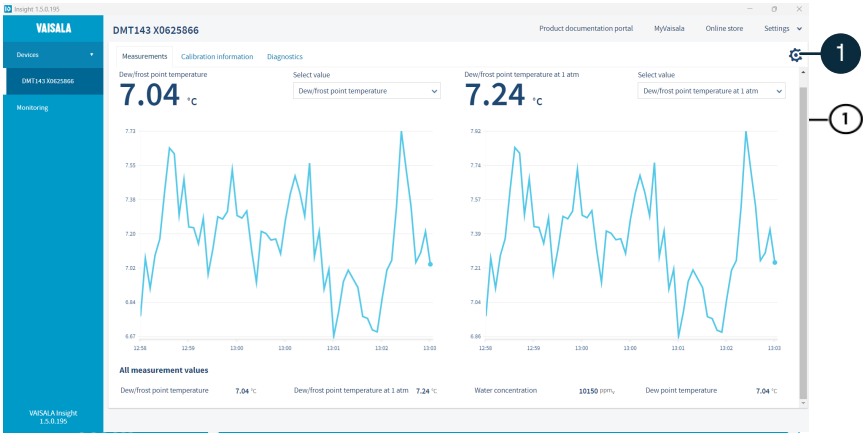

1 DMT143 settings are available through the settings wheel in the Insight **Devices** view.

Download Insight software at vaisala.com/insight.

> DMT143 transmitters support Insight from transmitter software version 1.4.4 onwards.

5.1 Connecting to Insight software

> - Computer with Vaisala Insight software installed
> - USB service cable (item code 219690)

CAUTION! When connecting several devices at the same time, note that your computer may not be able to supply enough power through its USB ports. Use an externally powered USB hub that can supply >2 W for each port.

Before connecting the transmitter to a PC, disconnect the cables from both the analog and digital ports of the transmitter.

1. Open the Insight software on your computer.
2. Connect the USB cable to a free USB port on the PC.
3. Connect the USB cable to the digital port of the transmitter.
4. Wait for Insight software to detect the transmitter.

   If the transmitter is not detected, disconnect and reconnect the Vaisala USB cable to the digital port connector of the transmitter.

6. Using transmitter with Indigo80 handheld indicator

6.1 Indigo80 handheld indicator

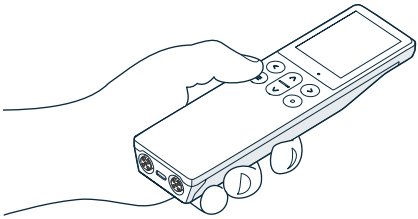

Figure 22 Indigo80 handheld indicator

Vaisala Indigo80 Handheld Indicator is a portable diagnostics tool that accommodates up to two compatible Vaisala devices for measuring a wide range of parameters.

With the indicator, you can:

- See real-time measurements and device and status information
- Log measurement data
- Configure transmitter features and settings such as compensation setpoints, serial communication, and analog output.

The help tours in the indicator's user interface guide you through the key features of the indicator. You can access the tours in the **Help** menu by pressing the ☰ button.

For more information on using the indicator, for example, editing the measurement views and performing data logging, see Indigo80 User Guide (M212722EN).

6.1.1 Device compatibility

The Indigo80 handheld indicator is tested for compatibility with DMT143 and DMT143L transmitters having firmware version 1.4.4 or newer. Transmitters with older firmware versions may have limited compatibility with the indicator.

For the most up-to-date version compatibility information, see Indigo80-compatible Firmware Technical Note (M212901EN).

6.1.2 Indigo80 keypad

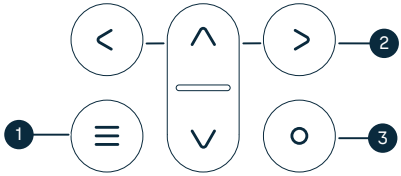

Figure 23 Indigo80 keypad

1 Power on/off and main menu button
2 Arrow buttons for navigating menus and scrolling views
3 Select button for selecting items in the user interface

6.1.3 Indigo80 main menu

Pressing the button while navigating the Indigo80 menus and views opens the main menu.

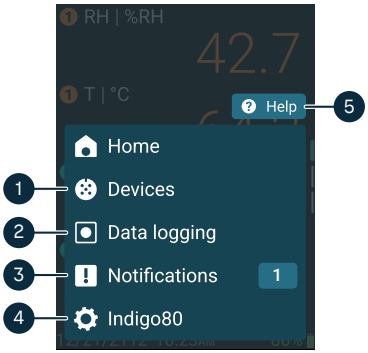

Figure 24 Indigo80 main menu

1 **Devices** menu contains, for example, options related to sensor purge, calibration, and environment settings (depending on the connected device).
2 **Data logging** menu for setting logging interval and duration, and browsing data files.
3 **Notifications** menu displays notifications related to Indigo80 and the connected devices.
4 **Indigo80** menu for changing the settings of Indigo80 (for example, date, time, and language) and viewing device information.
5 **Help** menu contains tours showing the key features of Indigo80, as well as instructions for sending devices to Vaisala for calibration and maintenance.

6.2 Connecting to Indigo80 handheld indicator

- M12 - M8 service cable (Vaisala item code 262195SP)

Up to two Vaisala Indigo-compatible measurement devices can be connected to the ports located on the bottom of Indigo80. You can connect and disconnect devices both when the indicator is powered on and when it is off.

Vaisala recommends using cables provided by Vaisala when connecting devices to the indicator. Cables and other accessories are available to order at store.vaisala.com.

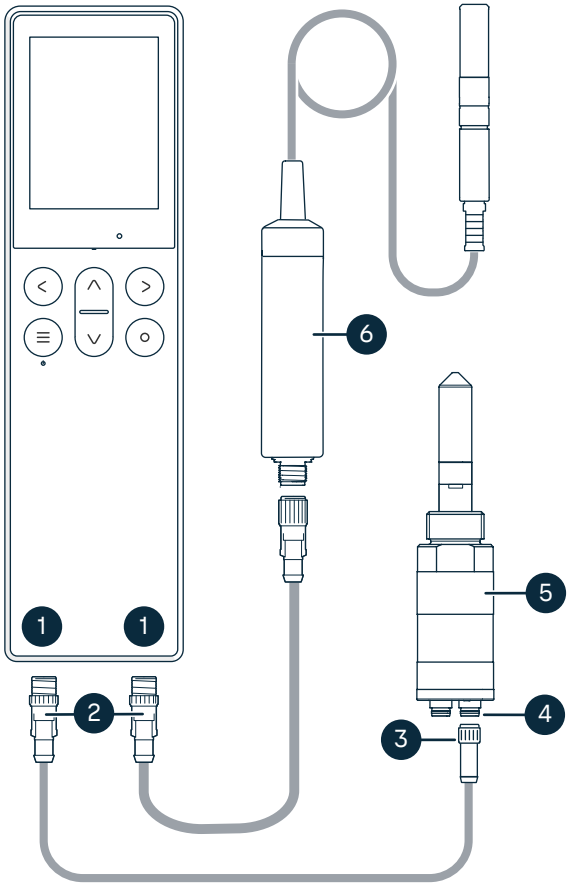

Figure 25 Connecting DMT143 transmitter to Indigo80 handheld indicator

1 M12-5F ports on the bottom of Indigo80 for connecting compatible Vaisala devices. Ports are labeled ❶ (left) and ❷ (right) on Indigo80.
2 M12-5M cable connector
3 M8-4F cable connector
4 Port labeled **Digital**
5 DMT143 transmitter, displayed as ❶ by Indigo80
6 HMP7 probe, displayed as ❷ by Indigo80

If you have altered the default communication settings of DMT143, always make sure you switch off the other power supply (disconnect the **Analog** cable if in use) before powering up Indigo80.

1. If the indicator is powered and no devices are connected to it, the text **Please connect a measurement device** will be shown on the display.
2. Connect the M8 end of the service cable to the port labeled **Digital** on the bottom of DMT143.
3. Connect the M12 end of the cable to one of the ports on the bottom of the indicator.
   - **Note the orientation of the cable connector when inserting it**
   - **Hold the connector in place while turning its locking ring clockwise – never twist the connector body!**

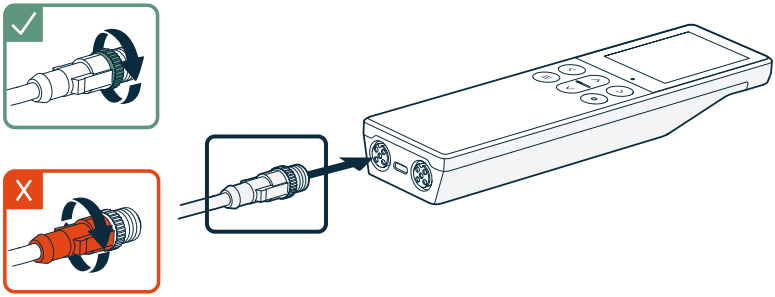

4. Wait for the indicator to detect the transmitter.

   When the indicator recognizes the connected transmitter, it shows a notification on the display. A device connected to the leftmost port in the indicator is labeled ❶ on the indicator's display, while the device in the rightmost port is labeled ❷.

For optimal measurement accuracy, the indicator guides you to check the transmitter's environment settings next.

When DMT143 is powered up, it performs a startup sequence consisting of sensor purge and autocalibration. During the 5-minute sequence measurement output remains frozen. Indigo80 will display the last measured values before the sensor purge began. The texts **Unreliable**, **Value locked**, and **Sensor purge** will alternate on the display during the startup sequence.

More information

- DMT143 startup sequence (page 24)
- Accessing transmitter settings with Indigo80 handheld indicator (page 49)

6.3 Accessing transmitter settings with Indigo80 handheld indicator

- M12 - M8 service cable (Vaisala item code 262195SP)

You can use the Indigo80 handheld indicator to configure transmitter features and settings such as compensation setpoints, serial communication, and analog output.

Accessing certain configuration options for DMT143 and DMT143L requires using the free Insight PC software, downloadable at vaisala.com/insight.

1. Connect the transmitter to the indicator.
2. Open the indicator main menu by pressing ☰.
3. Select **Devices**. If you have more than one device connected to the indicator, make a further selection between the devices.
4. Select **Environment settings > Pressure** to access the pressure settings for your transmitter. Note that the entered value is persistent and remains unchanged at device restart.
   a. Select the unit, if prompted.
   b. Use the arrow buttons to set the desired value, and then select **OK** or **Set**.
5. Exit the menu by pressing ⮜ or return to the main menu by pressing ☰.

6.4 Analog output configuration example

The DMT143 analog output channel can be configured with the Indigo80 indicator. You can use Indigo80 to:

- Enable or disable the analog output
- Select the output parameter and its scaling
- Set analog output error level

This example shows how to use Indigo80 to configure the transmitter's analog output 1 to use the following settings:

- 4–20 mA current output enabled
- Dew/frost point temperature measurement scaled to −80 ... +20 °C (−112 ... +68 °F) $T_{d/f}$
- Error output level set to 20 mA

1. Connect the transmitter to the indicator.
2. Open the indicator main menu by pressing ☰.
3. Select **Devices**. If you have more than one device connected to the indicator, make a further selection between the devices.
4. Select **Settings**.
5. Scroll down and select **Analog output 1**.
6. In **Output mode**, select **4–20 mA**.
7. In **Output parameter**, select **Dew/frost point temperature**.
8. Select **Output low end**. Use the arrow buttons to set the value as **−80.00 °C**, then select **Set**.
9. Select **Output high end**. Use the arrow buttons to set the value as **20.00 °C**, then select **Set**.
10. Select **Error output level**. Use the arrow buttons to set the value as **20.000 mA**, then select **Set**.

    Your configuration is now in use.
11. Exit the menu by pressing < or return to the main menu by pressing ☰.

7. Modbus communication

Transmitters ordered with the Modbus configuration option are accessed using the Modbus serial communication protocol. The supported Modbus variant is Modbus RTU (Serial Modbus) over RS-485 interface.

The supported Modbus functions and registers are described in *Appendix A: Modbus reference*.

The following table lists the default Modbus serial settings of devices ordered with the Modbus configuration option.

Table 7 Default Modbus serial communication settings

Description	Default value
Serial bit rate	19200
Parity	N
Number of data bits	8
Number of stop bits	2
Modbus device address	240
Serial delay	0
Communication mode	Modbus RTU

Use Vaisala Insight software to change the Modbus serial communication settings if needed. Download Insight software at vaisala.com/insight.

More information

- Vaisala Insight PC software (page 43)
- Modbus reference (page 94)

8. Serial communication

8.1 Connecting to the serial interface

To interface with DMT143 using Vaisala Industrial Protocol with a terminal application, the transmitter can be connected to a PC using the RS-485 line on the Digital port. It is recommended that you use the USB service cable (item code 219690) for the connection, since the cable also provides the operating power from the USB port. If you have not used the USB service cable before, install first Vaisala USB driver from vaisala.com/software.

More information

- Installing driver for the USB service cable (page 52)

8.1.1 Transmitter startup

When the transmitter is connected to power supply, there is a delay of 2 seconds as the transmitter starts up. After the startup is complete, the measurement data is available from the analog output and serial line.

If serial line output is used, note that the transmitter will behave according to the configured serial mode:

- In STOP mode, the transmitter outputs the transmitter model and software version. This is the default mode.
- In RUN mode a measurement output starts immediately.
- In POLL mode the transmitter does not output anything after startup.
- In MODBUS mode, the device does not output anything after startup.

More information

- DMT143 startup sequence (page 24)
- Power supply requirements (page 31)
- Modbus communication (page 51)
- Set serial line operating mode (page 69)

8.2 Installing driver for the USB service cable

Only Windows® operating systems are supported by the driver of the USB service cable.

1. Connect the USB service cable to a USB port on your computer. Windows detects the new device and installs the appropriate driver.

2. Open **Device Manager** from the Windows **Start** menu. Use search to find it if necessary (search for "device").
3. Locate the cable in the list of devices:
   - If the device is listed as **Vaisala USB Device** with a COM port number in brackets, the cable is ready for use.
   - If the device is listed as **Vaisala USB Instrument Cable** without a COM port number listed, you must install the driver manually.

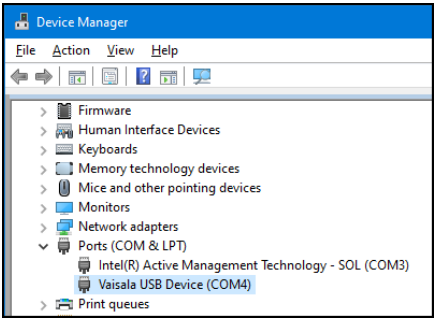

4. To install the driver manually:
   a. Disconnect the USB service cable from the computer.
   b. Download the Vaisala USB driver at vaisala.com/software (select the appropriate USB Instrument Driver Setup for your cable).
   c. Extract the driver zip file and run the USB driver installation program `Vaisala USB Device Driver Setup.exe`. Accept the installation defaults.
   d. Go back to step 1 and verify that the driver installation works as expected.

8.3 Terminal application settings

Table 8 Default serial interface settings

Property	Description/Value
Baud rate	19200
Parity	None
Data bits	8
Stop bits	1
Flow control	None

The following steps describe how to connect to DMT143 using the PuTTY terminal application for Windows (available for download at vaisala.com/software) and a USB serial interface cable:

1. Connect the USB serial interface cable between your PC and the RS-485 port of DMT143 (Digital port).
2. Start the PuTTY application.
3. Select the **Serial** settings category, and check that the correct COM port is selected in the **Serial line to connect to** field.

> You can check which port the USB cable is using with the **Vaisala USB Instrument Finder** program that has been installed in the Windows Start menu.

4. Check that the other serial settings are correct for your connection, and change if necessary. **Flow control** should be set to **None** unless you have a reason to change it.
5. Click the **Open** button to open the connection window and start using the serial line.

   If PuTTY is unable to open the serial port you selected, it will show you an error message instead. If this happens, restart PuTTY and check the settings.
6. You may need to adjust the **Local echo** setting in the **Terminal** category to see what you are typing on the serial line. To access the configuration screen while a session is running, click the right mouse button over the session window, and select **Change Settings...** from the pop-up menu.

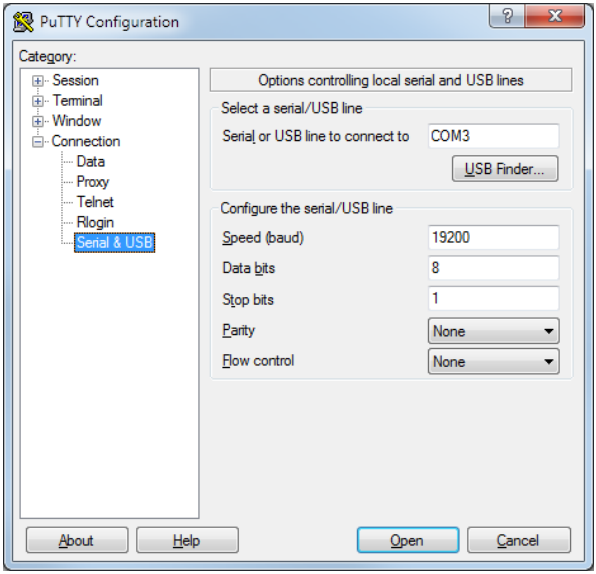

8.4 Accessing serial interface in devices with Modbus output

Follow the steps below to connect to the serial line with a transmitter with Modbus output. You can also use the procedure to retrieve the communication settings of your device, if you do not know them. You must use the Vaisala USB service cable (item code 219690) for the connection.

- Computer with
  - Windows operating system
  - Terminal application
  - Free USB port
  - Driver for Vaisala USB service cable installed
- Vaisala USB service cable (item code 219690)

1. Connect the USB cable to the PC and install the driver, if necessary. Do not connect the cable to the transmitter yet.

   The driver is available from vaisala.com/software.

2. Open the terminal program and open a connection to the corresponding COM port using the default settings **19200**, **8**, **N**, **1**, no flow control.
3. Keep the **Enter** key pressed down and connect the other end of the USB cable to the transmitter. This will cause the transmitter to start in serial mode, using the default serial settings.

   You can now use the transmitter with the terminal program.

To prevent Modbus mode from being restored on the next power-up, select a different serial mode with the **`smode`** command.

More information

- Installing driver for the USB service cable (page 52)

8.5 List of serial commands

All commands can be issued either in uppercase or lowercase. In the command examples, the keyboard input by the user is in **`bold`** type.

The notation <cr> refers to pressing the carriage return (**`Enter`**) key on your computer keyboard. Enter a <cr> to clear the command buffer before starting to enter commands.

Table 9 List of serial commands

Command	Description
<ESC>	Stop the continuous outputting of RUN mode or R command

Command	Description
?	Show device information
??	Show device information (overrides poll mode)
ADDR [0 ... 255]	Show or set transmitter address
AERR	Set analog output error level
ALARM	Set dew point level for LED alarm
AMODE	Show analog output mode
AOUT [ON/OFF]	Enable or disable analog output
AOVER [ON/OFF]	Allow analog outputs to exceed their range 10 %
ASEL	Set analog output parameter and scaling
ATEST	Test analog output
CLOSE	Close the temporary connection and return the device to POLL mode
ERRS	Display the currently active errors
FILT [0 ... 1]	Set output filtering level
FORM [modifier string]	Set output format
FRESTORE	Restore factory settings
HELP	Show list of currently available serial commands
INTV [0 ... 255 S/MIN/H]	Set the continuous output interval (for RUN mode and R command)
L	Show user adjustment values
LI	Set user adjustment values
OPEN [0 ... 255]	Open a line to transmitter at defined address
PRES [0.001 ... 50]	Set permanent pressure compensation value
R	Start the continuous outputting
RESET	Reset the transmitter
SDELAY [0 ... 255]	Set response sending delay
SEND [0 ... 255]	Output readings once (specify address for transmitters in POLL mode)
SERI [baud p d s]	Show or set the serial interface settings
SMODE [mode]	Show or set startup serial mode: RUN, STOP, POLL, or MODBUS
SNUM	Display transmitter serial number

Command	Description
SYSTEM	Show transmitter firmware information
UNIT [m/n]	Select metric or non-metric units
VERS	Show transmitter firmware version
XPRES [0.001 ... 50]	Set temporary pressure compensation value

8.6 Device information

8.6.1 Show device information

The **?** command outputs a listing of device information.

Table 10 ? command

Syntax	Description
?<cr>	Display device information.
??<cr>	Display device information in **POLL** mode.

Example:

```
?
DMT143 1.0.2
Serial number  : H1220011
Batch number   : H1210003
Sensor number  : G3320000
Sensor model   : DRYCAP180D
Cal. date      : 20120412
Cal. info      : VAISALA/HEL
Time           : 01:38:00
Serial mode    :     STOP
SCI  Baud P D S: 19200 N 8 1
Output interval:        1 S
Serial delay   :       30
Address        :        0
Pressure       :    1.013 bar
Filter         :    0.100
```

Command **??** is similar to the **?** command. It is designed to be used if the transmitter is in POLL mode but its address is unknown. The transmitter will respond to the **??** command even while in POLL mode. Do not use the **??** command if you have more than one transmitter on an RS-485 line.

8.6.2 Show analog output mode

Use the **AMODE** command to show the analog output mode:

AMODE<cr>

Example:

```
amode
Ch1 output     : 4 ... 20 mA
```

8.6.3 Show firmware version

Table 11 VERS command

Syntax	Description
VERS<cr>	Display the transmitter firmware version number.

Example:

```
vers
DMT143 1.0.2
```

8.6.4 Show firmware information

SYSTEM<cr>

Example:

```
system
Device Name          : DMT143
Copyright            : Copyright (c) Vaisala Oyj 2012. All rights reserved.
SW Name              : DMT143
SW date              : 2012-05-10
SW version           : 1.0.2
```

8.6.5 Show currently active errors

Use the **ERRS** command to display the currently active transmitter error messages.

ERRS<cr>

Example:

```
errs
No errors
```

Example (one active error, caused by physical damage to the sensor):

```
errs
T MEAS error
```

Table 12 Error messages on ERRS command

ERRS command response	Corresponding error
T MEAS error	Temperature measurement error. [44]
F meas error	Humidity measurement error. [45]
Flash crc failure	Firmware checksum mismatch. [49]
Parameter flash check sum error	Device settings corrupted. [50]
INFOA check sum error	Additional configuration settings corrupted. [51]
SCOEFS check sum error	Sensor coefficients corrupted. [52]
CURRENT check sum error	Main configuration settings corrupted. [53]
Voltage error	Supply voltage out of range. [55]
General flash failure w/r	Non-volatile memory read/write failure. [57]

More information

- Error messages in Insight software (page 81)

8.6.6 Show serial number

SNUM<cr>

Example:

```
snum
Serial number  : G4060003
```

8.6.7 Show command list

Use the **HELP** command to show a list of serial commands:

HELP<cr>

Example:

```
help
?
ADDR
AERR
ALARM
AMODE
AOVER
AOUT
ASEL
ATEST
CLOSE
ERRS
FILT
FORM
FRESTORE
GAS
HELP
INTV
L
LI
OPEN
PRES
R
RESET
SDELAY
SEND
SERI
SMODE
SNUM
SYSTEM
TIME
UNIT
VERS
XPRES
```

8.7 Configuring analog output

8.7.1 Set analog output parameters and scaling

Use the **ASEL** command to show or set the output parameter and the scaling of the analog output.

ASEL `[parameter] [lowlimit highlimit]`<cr>

Syntax	Description
`parameter`	Parameter that is output on analog channel. Available parameters are TD, TDF, TDFA, H2O.
`lowlimit`	Lower limit of parameter scaling.
`highlimit`	Higher limit of parameter scaling.

Example (show current settings):

```
asel
Ch1 Tdf  lo    :   -80.00 'C ?
Ch1 Tdf  hi    :    20.00 'C ?
```

Example (change output parameter to H2O, set low and high limits):

```
asel h2o 0 6000
Ch1 H2O  lo    :     0.00 ppm
Ch1 H2O  hi    :  6000.00 ppm
```

8.7.2 Set analog output error notification

If the transmitter is malfunctioning, the analog output is set to a specified level. This overrides the normal measurement output of the channel. The default level and unit is selected when ordering the transmitter. You can change the level using the **AERR** command.

AERR `[level]`<cr>

Syntax	Description
`level`	Error level for the analog output channel. Available range depends on the output type (check with **AMODE** command).

Example (check settings):

```
amode
Ch1 output     : 4 ... 20 mA

aerr
Ch1 error out  :    0.000 mA
```

Example (set analog channel error level to 20 mA):

```
aerr 20
Ch1 error out  :   20.000 mA
```

The error output value is displayed only when there are minor electrical faults such as a sensor damage. When there is a severe device malfunction, the error output value is not necessarily shown.

8.7.3 Extend analog output range

Use the **AOVER** command to allow the analog output channels to exceed their specified range by 10 %. The scaling of the parameter remains as before; the extra range is used for additional measurement range in the high end of the scale.

AOVER [ON/OFF]<cr>

Example (turning AOVER on):

```
aover on
AOVER                :       ON
```

The following example illustrates how the analog output is affected. The channel outputs T_d with voltage output 0–5 V (–80 ... –30 °C). After giving the **AOVER ON** command, the range is 0–5.5 V (–80 ... –25 °C). Note that the –30 °C T_d point is still at 5 V.

8.7.4 Test analog output

You can test the operation of the analog output with the **ATEST** command by forcing the output to a given value. You can then measure the output with a calibrated multimeter. After testing the output, give the **ATEST** command again to exit the test mode.

ATEST [level]<cr>

Syntax	Description
level	Level for analog output channel. Analog output type determines if the value is V or mA.

The command output shows the test value of the analog output as well as diagnostic information that may be useful to Vaisala Service Center if there is a problem with the analog output.

Example (enabling analog output test mode, setting level to 20 mA):

```
atest 20
  20.000    27407
```

Example (disabling analog output test mode, resuming normal output):

```
atest
   0.000    15831
```

8.7.5 Enable or disable analog output

Use the **AOUT** command to enable or disable the analog output channel.

AOUT [ON/OFF]<cr>

Example (turn analog output off):

```
aout off
AOUT : OFF
```

8.8 Serial line output commands

8.8.1 Start measurement output

Use the **R** command to start the continuous outputting of measurement values as an ASCII text string to the serial line. The format of the measurement message is set with the **FORM** command.

Table 13 R command

Syntax	Description
r<cr>	Starts continuous measurement output.

Example (measurement message in default format):

```
r
Tdf= 17.75 'F Tdfatm= -5.25 'F H2O=   954 ppm
Tdf= 17.23 'F Tdfatm= -5.72 'F H2O=   930 ppm
Tdf= 17.06 'F Tdfatm= -5.88 'F H2O=   922 ppm
Tdf= 16.97 'F Tdfatm= -5.96 'F H2O=   918 ppm
...
```

Outputting the results continues in intervals issued with the command **INTV** until stopped.

8.8.2 Stop measurement output

You can stop the measurement output by pressing the **Esc** key.

8.8.3 Set output interval

Use the **INTV** command to change the output interval of the automatically repeating measurement messages. The measurement messages are repeated in the **RUN** mode, or after the **R** command has been given.

INTV [n xxx]<cr>

Syntax	Description
n	time interval, range 0–255
xxx	time unit = "S", "MIN", or "H"

The shortest output interval (with n = 0) outputs the measurement messages as quickly as the transmitter's internal measurement cycle produces them, without additional delay.

Example:

```
intv 1 min
Output interval:        1 MIN
```

8.8.4 Output a reading once

Use the **SEND** command to output a single measurement message. The output message is sent in the format that has been set using the **FORM** command.

Syntax	Description
SEND [address]<cr>	Address of the transmitter, range 0–255. Specifying the address is only necessary if the target transmitter is in POLL mode, and has not been accessed with the **OPEN** command.

Example:
`send`
`Tdf= 16.71 'F Tdfatm= -6.19 'F H2O=  907 ppm`	

8.9 Configuring measurement parameters

8.9.1 Set measurement output format

Use the serial line command **FORM** to change the measurement message sent by the transmitter. You can freely define the output message to include the desired parameters, formatting options, text strings, and additional fields.

form [modifier string]<cr>

Syntax	
modifier string	String of parameters and modifiers that defines the output format, length 1–153 characters. Maximum length may be shorter when text strings are used.

Table 14 FORM command parameters

Measured parameter	Abbreviation in FORM command
Dew point temperature	Td
Dew point/frost point temperature	Tdf

Measured parameter	Abbreviation in FORM command
Dew point/frost point temperature, converted to atmospheric pressure	`Tdfa`
ppm moisture, by volume	`H20`

Table 15 FORM command modifiers

Modifier	Description
`x.y`	Length modifier (number of digits and decimal places)
`#t`	Tabulator
`#r`	Carriage return
`#n`	Line feed
`""`	String constant, length 1–15 characters
`#xxx`	ASCII code value (decimal) of a special character; for example, `#027` for **Esc**
`ADDR`	Transmitter address (0–255)
`ERR`	Currently active transmitter errors in a four-bit field: bit0bit1bit2bit3bit4 • bit0 T MEAS error • bit1 N/A • bit2 Fmeas error • bit3 Flash csum error
`SN`	Transmitter serial number
`STAT`	Transmitter status in a one-character field: • h – sensor heating active • H – purge active • A – autocalibration active
`Ux`	Shows the name of the measurement unit using “x” number of characters. For example, `U3` shows the name of the measurement unit with 3 characters
`CS2`	Modulus-256 checksum of message sent so far, ASCII encoded hexadecimal notation
`CS4`	Modulus-65536 checksum of message sent so far, ASCII encoded hexadecimal notation
`CSX`	NMEA xor-checksum of message sent so far, ASCII encoded hexadecimal notation

FORM command examples

You can return to the default format using the "**FORM /**" command.

Example of default output (continuous output from RUN mode):

```
Tdf= -9.80 'C Tdfatm= -9.80 'C H2O=  2618 ppm
Tdf= -9.80 'C Tdfatm= -9.80 'C H2O=  2617 ppm
...
```

Command to set output format as $T_{d/f}$ and ppm with Modulus-256 checksum:

```
form 3.2 "Tdf=" Tdf U3 6.0 "H2O=" H2O " " U5 CS2 \r \n
```

Output example:

```
Tdf= -9.74'C H2O=  2632 ppm  C4
Tdf= -9.72'C H2O=  2636 ppm  C6
...
```

Command to set output format as $T_{d/f}$ and ppm, with **start of text** (ASCII character 002) and **end of text** (003) ASCII codes, and without line feed and carriage return at the end:

```
form #002 3.2 "Tdf="Tdf U3 6.0 "H2O=" H2O " " U5 #003
```

Output example (ASCII codes not visible here):

```
Tdf= -9.57'C H2O=  2671 ppm  Tdf= -9.59'C H2O=  2666 ppm
Tdf= -9.61'C H2O=  2662 ppm  Tdf= -9.62'C H2O=  2660 ppm
...
```

8.9.2 Set measurement filtering

Use the **FILT** command to view or set the speed at which the latest measurement result is integrated into the output readings. The command affects both analog output and serial line output.

FILT [a.aaaaa]<cr>

Syntax	Description
a.aaaaa	Range 0.00001–1.0 1.0 = No filtering, latest measurement is output without averaging 0.5 = Average of last two measurements 0.1 = Average of approx. 16 measurements (default)

Example (show current setting):

```
filt
Filter          :    0.10000     ?
```

Example (set filtering to 0.5):

```
filt 0.5
Filter          :    0.50000
```

8.9.3 Set pressure compensation value

The pressure of the measured system must be known for accurate dew point and ppm measurement. The pressure compensation value has been set at the factory according to the order form. You can view and set a new value using the **PRES** command.

Command **XPRES** should be used if the value is changed frequently. The value set using the **XPRES** command overrides the **PRES** value, but it is not retained at reset. When the **XPRES** is set to 0, the last value set with **PRES** is used instead.

It is enough to set an approximate pressure value (±1 bar) to meet the accuracy specification of DMT143.

PRES `[pp.ppppp]`<cr>

XPRES `[pp.ppppp]`<cr>

Syntax	Description
`pp.ppppp`	Absolute pressure (bar, absolute) in the measuring point. Range 0.001–50 bar.

Example (set pressure compensation value to 3 bar):

```
pres 3
Pressure : 3.000 bar
```

The pressure conversion coefficients from other pressure units to bars is given in the table below.

Table 16 Pressure conversion coefficients

From	To bar, absolute
PaN/m^2	0.00001
mmHg torr	0.001333224
inHg	0.03386388

From	To bar, absolute
mmH_2O	0.00009806650
inH_2O	0.002490889
atm	1.01325
at	0.980665
psi, absolute	0.06894757

For example: 29.9213 inHg = 29.9213 × 0.03386388 = 1.01325 bar, absolute.

8.9.4 Select unit

Use the **UNIT** command to select metric or non-metric output units.

UNIT [x]<cr>

Syntax	Description
x	Selects the unit type to output: m = metric units, for example, Celsius n = nonmetric units, for example, Fahrenheit

Example:

```
unit m
Units          : Metric
```

8.9.5 View user adjustment parameters

Use the **L** command to view the current user adjustment parameters that are affected by the **LI** command and the Indigo80 indicator (Tdf offset only). This command is useful for checking the currently applied correction.

L<cr>

The output values are as follows:

- RH offset and gain
- T offset and gain
- Tdf offset and gain

Example (shows default values, no user adjustment done):

```
l
RH offset :   0.00000000E+00
RH gain   :   1.00000000E+00
T  offset :   0.00000000E+00
T  gain   :   1.00000000E+00
Tdf offset:   0.00000000E+00
Tdf gain  :   1.00000000E+00
```

Example (shows that a -1.2 °C Tdf offset has been applied by the user):

```
l
RH offset :   0.00000000E+00
RH gain   :   1.00000000E+00
T  offset :   0.00000000E+00
T  gain   :   1.00000000E+00
Tdf offset:  -1.20000000E+00
Tdf gain  :   1.00000000E+00
```

8.9.6 Set user adjustment parameters

Use the **LI** command to set the user adjustment parameters directly. This command is useful for restoring the desired adjustments, and removing the effects of user adjustment without having to perform the factory reset.

CAUTION! This command is provided primarily for applying an offset to the Tdf measurement. Do not adjust the other parameters unless instructed to do so by a Vaisala Service Center.

LI<cr>

After entering the command, you will be prompted to enter new values one at a time. Press ENTER without giving a value to move to the next parameter.

Example (shows a +0.8 °C Tdf offset being applied):

```
li
RH offset :   0.00000000E+00  ?
RH gain   :   1.00000000E+00  ?
T  offset :   0.00000000E+00  ?
T  gain   :   1.00000000E+00  ?
Tdf offset:   0.00000000E+00  ?
Tdf gain  :   1.00000000E+00  ?
```

8.10 Configuring serial line operation

8.10.1 Set serial line operating mode

Use the **SMODE** command to set the startup operating mode of the serial line.

SMODE [mode]<cr>

Syntax	Description
mode	STOP, RUN, POLL, or MODBUS.

Table 17 Selection of output modes

Mode	Measurement output	Available commands
STOP	Only with the **SEND** command.	All (default mode).
RUN	Automatic output.	Only command **S**.
POLL	Only with the **SEND** [addr] command.	**SEND** [addr] and **OPEN** [addr]. Other commands available after opening a line to the transmitter using the **OPEN** command. Use with RS-485 buses where multiple transmitters can share the same line.
MODBUS	No automatic output.	Measurement outputs must be read from the transmitter using the Modbus protocol.

Selected output mode will be activated at next reset or power up.

Example:

```
smode poll
Serial mode    :     POLL
```

More information

- Accessing serial interface in devices with Modbus output (page 55)

8.10.2 Set serial line settings

Use the **SERI** command to set the serial line settings. The new settings will be taken into use when the transmitter is reset or powered up.

> If you have altered the DMT143 serial line settings and start using the Indigo80 handheld indicator, always switch off the other power supply (disconnect "Analog" cable if in use) before powering up the Indigo80.

SERI [b p d s]<cr>

Syntax	Description
b	baud rate (4800, 9600, or 19200)
p	parity (n = none, e = even, o = odd)
d	data bits (7 or 8)
s	stop bits (1 or 2)

Example (set serial line to 9600 baud, no parity, 7 data bits, and 1 stop bit):

```
seri 9600 e 7 1
SCI  Baud P D S: 9600 E 7 1
```

More information

- Using transmitter with Indigo80 handheld indicator (page 45)

8.10.3 Set transmitter address

To operate in the **POLL** mode, the transmitter must have an address. If multiple transmitters share the same serial line, each transmitter must have a different address.

Syntax	Description
ADDR [address]<cr>	**[address]** = address, range 0–255.

Example:
 `addr`
 `Address : 0 ?`	

More information

- Set serial line operating mode (page 69)

8.10.4 Set serial line response time

With the **SDELAY** command you can set the delay (response time) of the serial line, or view the currently set delay value.

SDELAY [delay]<cr>

Syntax	Description
SDELAY [delay]<cr>	**[delay]** = serial line delay, range 0–255. One unit of delay corresponds to 4 milliseconds.

Example (set delay to 120 milliseconds):

```
sdelay 30
Serial delay   :        30
```

8.11 Other commands

8.11.1 Opening the transmitter in POLL mode

Use the **OPEN** command to connect to a transmitter that is in POLL mode.

OPEN [address]<cr>

Syntax	Description
address	Transmitter address, range 0–255.

Example (target transmitter in POLL mode, with address 5):

```
open 5
DMT143   5 line opened for operator commands
```

8.11.2 Closing the connection to a transmitter in POLL mode

The **CLOSE** command closes the connection to a transmitter.

CLOSE<cr>

Example:

```
close
line closed
```

8.11.3 Configure alarm LED

Use the **ALARM** command to configure the alarm LED functionality.

ALARM [LED] [Alarm] [Level]<cr>

Syntax	Description
`LED`	Enable or disable the entire LED functionality. Allowed values: **`ON`** - Enable the LED functionality. **`OFF`** - Turn off the LED completely.
`Alarm`	Enable or disable the dew point alarm. Allowed values: **`ON`** - Enable the dew point alarm. **`OFF`** - Turn off the dew point alarm.
`Level`	Dew point temperature above which the alarm LED will turn red. The LED will turn green when the measured dew point temperature falls below this level. Range -70 ... +60 °C T_{df}.

Example (show current settings):

```
alarm ?
LED display    :       OFF
Alarm display  :       OFF
Setpoint Td(°C):   -10.00
```

Example (change values line by line, enter to skip line):

```
alarm
LED display : OFF ? on
Alarm display : OFF ? on
Setpoint Td(°C): -10.00 ? -40
```

Example (change alarm level to -40 °C T_{df}):

```
alarm on on -40
LED display    :       ON
Alarm display  :       ON
Setpoint Td(°C):   -40.00
```

Example (turn off the dew point alarm only):

```
alarm on off
LED display : ON
Alarm display : OFF
Setpoint Td(°C): -40.00
```

Example (turn off the LED completely):

```
alarm off
LED display    :      OFF
```

More information

- Alarm LED (page 25)

8.11.4 Reset transmitter

Use the **RESET** command to reset the transmitter.

RESET<cr>

When the **RESET** command is given, the transmitter will restart as if it had just been powered on. All transmitter settings are retained. The serial line mode of the transmitter will be set to the mode that was set using the **SMODE** command.

8.11.5 Restore factory settings

Use the **FRESTORE** command to restore the transmitter to its factory configuration. All user settings will be lost.

FRESTORE<cr>

After using the **FRESTORE** command, reset the transmitter using the **RESET** command.

9. Maintenance

9.1 Periodic maintenance

9.1.1 Cleaning

You can clean the body of the transmitter by wiping with a moistened lint-free cloth. Do not immerse the transmitter in liquid, and do not use cleaning agents or solvents.

9.1.2 Changing the filter

Replace the filter if it is contaminated. New filters are available from Vaisala.

CAUTION! Be careful when changing the filter, since it is easy to break the sensor when the filter is removed.

CAUTION! If the transmitter has the optional stainless steel filter HM47453SP for vacuum applications installed, note that it has tapered threads and is not meant to be removed on site. Trying to forcefully loosen the filter may damage the transmitter instead. The filter replacement instructions below are for the standard sintered filter DRW010335SP with parallel threads.

CAUTION! If the transmitter is installed in a pressurized chamber, always make sure that the pressure of the chamber is equalized with the ambient pressure prior to removing the transmitter. When the transmitter is removed for maintenance, cap the hole with a capped nut. This way, the chamber can be pressurized although the transmitter is not in place.
Plugs are available from Vaisala for ISO and NPT threaded connections.

When replacing the filter, wear clean gloves to avoid depositing dirt or oil on the filter. Inspect the sealing ring for damage (used with ISO thread only), and replace it if necessary.

Replace the filter as follows:

1. Turn the filter counterclockwise until it is loose.

2. Pull the filter straight out carefully.

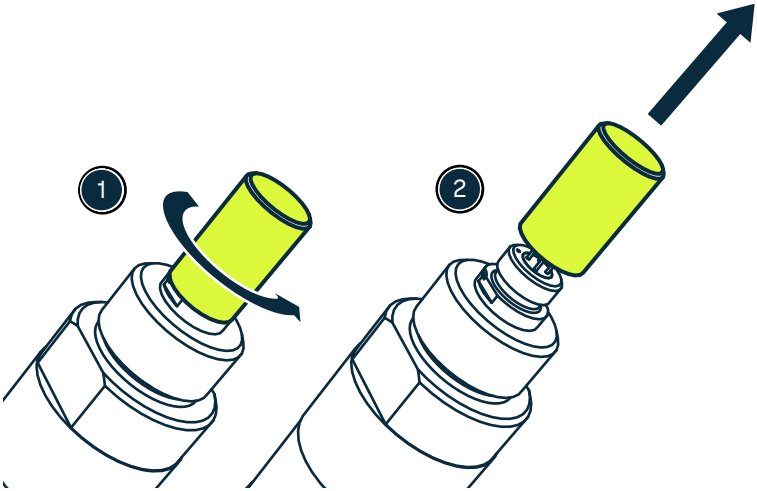

CAUTION! Do not damage the sensor.

3. Take the new filter, and insert it to the filter thread.
4. Tighten the new filter to 5 Nm by turning it clockwise.

More information

- Spare parts and accessories (page 91)

9.2 Calibration

Calibration means comparing the measurement output of the device to a known reference, such as a known environment in a calibration chamber or the output of a reference instrument. Correcting the reading of the device so that it measures accurately is referred to as **adjustment**.

DMT143 is fully calibrated as shipped from the factory. The typical calibration interval is 2 years. If there is a reason to believe that the device is not within the accuracy specifications, you can perform a field check using the Indigo80 handheld indicator.

If the field check indicates that DMT143 is not within its accuracy specifications, contact a Vaisala Service Center or your local Vaisala representative to have DMT143 adjusted.

Factory calibration leads to highest accuracy and lowest uncertainty. After factory calibration the instrument performs as new. For up-to-date information about calibration points and offering, visit store.vaisala.com.

WARNING! When returning a product for calibration or repair, make sure it has not been exposed to dangerous contamination, and is safe to handle without special precautions.

You can modify the transmitter's calibration interval and reminder using the Insight PC software, the Indigo80 handheld indicator, or via an Indigo transmitter that is connected to Insight or Indigo80.

If you think the device is not measuring correctly, calibration and adjustment is not the first thing to do. Check the following first:

- Make sure that the location for the probe represents well the area of interest, and nothing is interfering with the measurement: heat sources, temperature differences, or condensation.
- Check that there is no moisture on the probe. If the sensor has become wet, wait for it to dry.
- Always wait for the measurement to stabilize.

More information

- Vaisala Insight PC software (page 43)
- Using transmitter with Indigo80 handheld indicator (page 45)
- Field check using Indigo80 handheld indicator (page 77)

9.2.1 Field check using Indigo80 handheld indicator

Vaisala recommends the following equipment for field checking:

- A fully charged Indigo80 handheld indicator.
- A calibrated reference probe that is suitable for the intended measurement environment and dew point range. The DMP80B probe is recommended for checking the dew point temperature measurement accuracy.
- You also need a connection cable (Vaisala item code 262195SP) to connect DMT143 to the Indigo80 indicator.

In the following procedure, the readings of the transmitter and the reference probe are checked simultaneously. You can also check the reference probe and DMT143 separately if they cannot be connected at the same time.

Perform the check as follows:

1. Place the reference probe and DMT143 in the reference environment.
2. Connect the reference probe and DMT143 to the Indigo80 indicator:
   - Reference probe to Port I
   - DMT143 to Port II
3. If you have altered the DMT143 serial port settings, switch off the other power supply (disconnect “Analog” cable if in use) before powering up the Indigo80. Note that this powers off the transmitter, and it will carry out the startup sequence when powered on again.
4. Turn on the Indigo80 indicator.
5. Check and adjust the environment settings, if prompted. Refer to the DMP80 Series User Guide (M212904EN) for the settings of the DMP80B probe.
6. Disable the **Automatic power off** function of the Indigo80 indicator to prevent the indicator from powering off in the middle of the check. Check the setting in the **Indigo80** menu, and change if necessary.
7. Indigo80 can compare 1 or 2 parameters at one time. To select the parameters, press **Select > Add view > Comparison > Add comparison**. You can select from the following parameters:
   - Dew point temperature
   - Dew/frost point temperature
   - Dew/frost point temperature at 1 atm
   - Water concentration

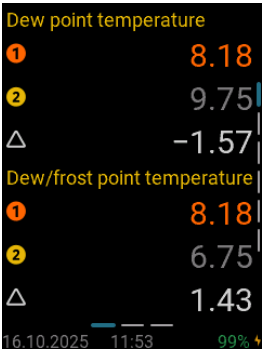

   When the two devices are connected, Indigo80 displays the same parameter for port I and II, and the delta parameter that shows the difference between the two. For example, $\Delta T_{d/f}$ shows the difference in dew point/frost point between the two devices.
8. After the measurement has stabilized, check the difference between the readings. It gives you an indication of the approximate drift of DMT143 and its need for calibration. The difference between the readings should be no greater than the combined measurement uncertainty of DMT143 and the reference probe.

   Use the ⟨ and ⟩ buttons to scroll through the parameter graph view. For more information on the graph view, refer to the Indigo80 User Guide (M212722EN).

9. Write down the results and repeat the comparison for each parameter you want to check.
10. If needed, you can add $T_{d/f}$ offset (+/-5 degrees). Press **Devices > Calibrate / Adjust > Td/f offset**, select the temperature unit and enter the desired value for $T_{d/f}$ offset.
11. If adjustment is required, contact a Vaisala Service Center or your local Vaisala representative to have DMT143 adjusted.

More information

- Connecting to Indigo80 handheld indicator (page 46)

9.3 Repair maintenance

CAUTION! The transmitter body does not have user serviceable parts inside, and is not designed to be opened. Opening the transmitter will void the warranty.

If there is a problem with your transmitter that you are unable to solve yourself or with the help of Vaisala Helpdesk, contact a Vaisala Service Center. In case of mechanical or electrical failure, the Service Center may replace the transmitter with a new one.

More information

- Troubleshooting (page 80)
- Technical support (page 93)

10. Troubleshooting

10.1 Solving typical problems

Some problems can be solved by simply resetting the transmitter. You can reset the transmitter by disconnecting the power or issuing the **RESET** command using the service port.

If resetting does not help, and if the problem is related to transmitter software or settings, you can restore the factory configuration of the transmitter by issuing the **FRESTORE** command. If you are unable to solve your problem with the transmitter, contact Vaisala.

Table 18 Troubleshooting table

Problem	Possible causes and solutions
One of the following occurs: • Transmitter outputs stars "****" on serial line instead of measurement data. • Unavailable value in Modbus mode. • Analog signal is at error level.	Possible causes: damaged sensor, incorrect supply voltage, and unsuitable measurement environment. Power cycle or reset the transmitter, and see if the problem continues. Check the active errors using Vaisala Insight PC software or the **ERRS** command. Check the power supply.
Unable to access transmitter on the RS-485 line.	Possible causes: Incorrect wiring, unknown serial settings, transmitter in POLL or MODBUS mode with unknown address. Check wiring. Check communication settings with Vaisala Insight PC software, or try connecting to the serial line.
Analog output seems to be stuck, the measurement is not changing.	Possible causes: Sensor diagnostics in progress (autocalibration or purge), malfunction error active. Check the active errors using Vaisala Insight PC software or the **ERRS** command. Wait for the diagnostics to complete.
Dew point alarm LED is red even though the measured dew point is not high.	Possible causes: the alarm limit may be set incorrectly for your application. Check and correct using Vaisala Insight PC software, serial line, or Indigo80 indicator.

More information

- Vaisala Insight PC software (page 43)
- Connecting to the serial interface (page 52)
- Accessing serial interface in devices with Modbus output (page 55)
- Technical support (page 93)

10.2 Error messages in Insight software

Table 19 Error messages in Insight software

Error	Likely cause	Suggested solution
Temperature measurement error. [44]	Temperature sensor is short circuited, damaged, or missing.	Check that the legs of the temperature sensor are not short circuited. Contact Vaisala if the sensor is damaged.
Humidity measurement error. [45]	Humidity sensor is wet, damaged, or missing.	Wait for the humidity sensor to dry, or remove the filter and gently dry the sensor and the filter with clean instrument air. Contact Vaisala if the sensor is damaged.
Supply voltage out of range. [55]	Supply voltage is too low.	Check and correct the power supply and wiring.
Firmware checksum mismatch. [49]	Internal transmitter failure.	Power-cycle the device, and if necessary, restore the factory settings. If the error remains, contact Vaisala.
Device settings corrupted. [50]		
Additional configuration settings corrupted. [51]		
Sensor coefficients corrupted.		
Main configuration settings corrupted. [53]		
Non-volatile memory read/write failure. [57]		

In case of constant error, contact Vaisala.

More information

- Technical support (page 93)

10.3 Unknown serial settings

You can check the current serial settings of your transmitter by connecting to the serial line, or with Vaisala Insight software.

More information

- Vaisala Insight PC software (page 43)
- Accessing serial interface in devices with Modbus output (page 55)

11. Technical data

11.1 DMT143 specifications

Table 20 DMT143 measurement performance

Property	Description/Value
Sensor	DRYCAP® 180D
Sensor protection	Stainless steel sintered filter
Calibration interval to confirm the specified accuracy (typical)	2 years
Dew point temperature	
Measurement range (typical)	−70 ... +60 °C (−94 ... +140 °F) $T_{d/f}$
Accuracy in air or N_2 [1]	±2 °C (±3.6 °F) $T_{d/f}$ (see graph below)
Dew point measurement accuracy vs. measurement conditions	
Response time 63 % [90 %]: [2]	
−70 → −20 °C $T_{d/f}$ (−94 → −4 °F $T_{d/f}$)	5 s [15 s] (typical)
−20 → −70 °C $T_{d/f}$ (−4 → −94 °F $T_{d/f}$)	45 s [10 min] (typical)
Water concentration by volume (ppm)	
Measurement range (typical)	10–40 000 ppm
Accuracy at +20 °C (+68 °F), 1 bar	1 ppm + 20 % of reading

1) *When the dew point temperature is below 0 °C (32 °F), the transmitter outputs frost point temperature for $T_{d/f}$.*
2) *At +20 °C (+68 °F) gas temperature and 1 bar pressure and 1 liter/min flow rate.*

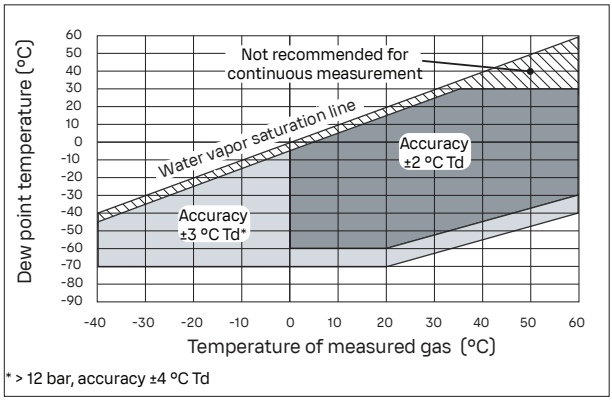

Figure 26 Dew point measurement accuracy vs. measurement conditions

Table 21 DMT143 operating environment

Property	Description/Value
Measurement environment	For air, nitrogen, hydrogen, argon, helium, and oxygen [1) 2)]
Temperature [3)]	−40 ... +60 °C (−40 ... +140 °F)
Relative humidity	0–100 % RH
Operating pressure [3)]	0–50 bar (725 psi), absolute
Sample flow rate	No effect for measurement accuracy
Storage temperature	−40 ... +60 °C (−40 ... +140 °F)
IP rating	IP66: Dust-tight. Protected from powerful water jets from any direction.

1) *Consult Vaisala if other chemicals are present. Consider safety regulations with flammable gases. The transmitter is not certified for use in hazardous areas with potentially explosive atmospheres.*
2) *The transmitter is not tested for leakages, which may occur especially with small-molecule gases such as hydrogen and helium.*
3) *For extended temperature below 0 °C (+32 °F) or pressure above 20 bar (290 psi), absolute, the supply voltage must be 24–28 V DC.*

Table 22 DMT143 inputs and outputs

Property	Description/Value
Analog output (scalable)	4–20 mA (3-wire), 0–1 V / 5 V, 1–5 V

Property	Description/Value
Resolution for current output	0.002 mA
Resolution for voltage output	0.3 mV
Accuracy for current output at +20 °C	±0.05 mA
Accuracy for voltage output at +20 °C	±0.01 V
Operating voltage with digital output	12–28 V DC
Operating voltage with voltage output	12–28 V DC
Operating voltage with current output	18–28 V DC
Load for current output	Max. 500 Ω
Load for voltage output	Min. 10 kΩ
Typical temperature dependence	0.005 % of span/°C
Digital output	RS-485, non-isolated
Supported protocols	Vaisala Industrial Protocol Modbus RTU
Connector	4-pin M8 (IEC 60947-5-2)
Supply current at +20 °C (U_{in} 24 V DC)	
Normal measurement	10 mA + load current (typical)
During self-diagnostics	220 mA pulsed (typical)

Table 23 DMT143 mechanical specifications

Property	Description/Value
Mechanical connection	ISO 228-1 G1/2″ 1/2″ NPT 3/4″-16 UNF 5/8″-18 UNF
Housing material	Stainless steel (AISI316L)
Weight:	
G thread and UNF thread models	90 g (3.2 oz)
NPT thread model	100 g (3.5 oz)

Table 24 DMT143 compliance

Property	Description/Value
EU directives and regulations	EMC Directive (2014/30/EU) RoHS Directive (2011/65/EU) as amended by 2015/863
Electromagnetic compatibility (EMC)	IEC/EN 61326-1, industrial environment CISPR 32 / EN 55032, Class B FCC part 15 B, Class B ICES-3 / NMB-3 (Class B)
Compliance marks	CE, China RoHS, RCM, UKCA

11.2 DMT143L specifications

Table 25 DMT143L measurement performance

Property	Description/Value
Sensors	DRYCAP® 180M DRYCAP® 180S (optimal for refrigeration dryers)
Sensor protection	Stainless steel sintered filter Stainless steel filter for vacuum
Calibration interval to confirm the specified accuracy (typical)	2 years
Measurement range (typical)	−60 ... +60 °C (−76 ... +140 °F)
Accuracy with DRYCAP® 180M	±2 °C (±3.6 °F) [1)]

1) *When the dew point temperature is below 0 °C (32 °F), the transmitter outputs frost point.*

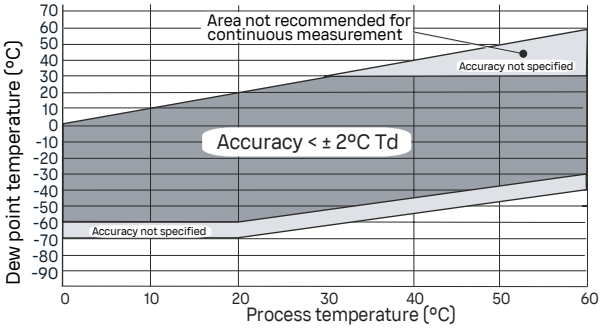

Figure 27 Accuracy with DRYCAP 180M sensor

Dew point accuracy vs. measurement conditions	
Response time 63 % [90 %] at +20 °C (+68 °F) gas temperature and 1 bar pressure and 1 liter/min flow rate:	
−60 → −20 °C T_d (−76 → −4 °F T_d)	5 s [10 s] (typical)
−20 → −60 °C T_d (−4 → −76 °F T_d)	45 s [10 min] (typical)
Accuracy with DRYCAP® 180S	±2 °C (±3.6 °F) [1]

1) *When the dew point temperature is below 0 °C (32 °F), the transmitter outputs frost point temperature.*

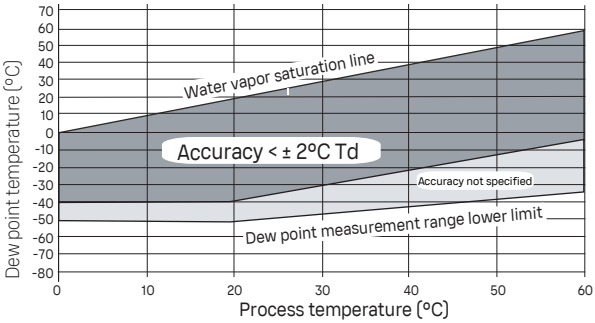

Figure 28 Accuracy with DRYCAP 180S sensor

Table 26 DMT143L operating environment

Property	Description/Value
Measurement environment	For air, nitrogen, hydrogen, argon, helium, and oxygen [1] [2]

Property	Description/Value
Operating temperature	0 ... +60 °C (+32 ... +140 °F)
Higher temperature peaks	Short-term OK
Relative humidity	0–100 %RH
Operating pressure	0–20 bar (0–290 psi), absolute
Mechanical durability	Up to 50 bar (725 psi)
Sample flow rate	No effect
Storage temperature	−40 ... +60 °C (−40 ... +140 °F)
IP rating	IP66: Dust-tight. Protected from powerful water jets from any direction.

1) *Consult Vaisala if other chemicals are present. Consider safety regulations with flammable gases. The transmitter is not certified for use in hazardous areas with potentially explosive atmospheres.*
2) *The transmitter is not tested for leakages, which may occur especially with small-molecule gases such as hydrogen and helium.*

Table 27 DMT143L inputs and outputs

Property	Description/Value
Analog current output	4–20 mA (3-wire)
Digital output	RS-485, non-isolated
Supported protocols	Vaisala Industrial Protocol Modbus RTU
Resolution for current output	0.002 mA
Accuracy for current output at +20 °C	±0.05 mA
External load for current output	Max. 500 Ω
Operating voltage with current output	18–28 V DC
Operating voltage with digital output	12–28 V DC
Typical temperature dependence	0.0008 mA/°C
Power consumption at 24 V DC	Max. 220 mA

Table 28 DMT143L mechanical specifications

Property	Description/Value
Mechanical connection	ISO 228-1 G1/2″ with bonded seal ring (U-seal) or 1/2″ NPT thread

Property	Description/Value
Housing material	Stainless steel (AISI 316L)
Weight, G thread model	90 g (3.2 oz)
Weight, NPT thread model	100 g (3.5 oz)

Table 29 DMT143L compliance

Property	Description/Value
EU directives and regulations	EMC Directive (2014/30/EU) RoHS Directive (2011/65/EU) as amended by 2015/863
Electromagnetic compatibility (EMC)	IEC/EN 61326-1, industrial environment CISPR 32 / EN 55032, Class B FCC part 15 B, Class B ICES-3 / NMB-3 (Class B)
Compliance marks	CE, China RoHS, RCM, UKCA

11.3 Dimensions

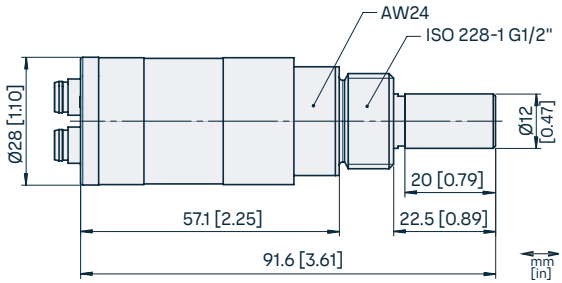

Figure 29 DMT143 with ISO 228-1 G1/2" thread

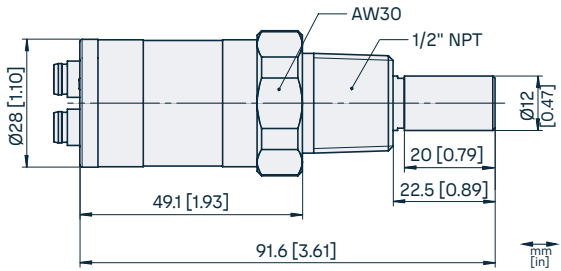

Figure 30 DMT143 with 1/2″ NPT thread

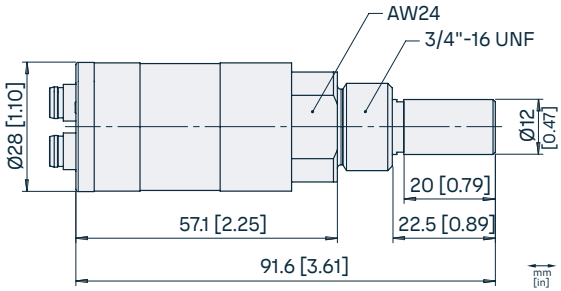

Figure 31 DMT143 with 3/4″-16 UNF thread

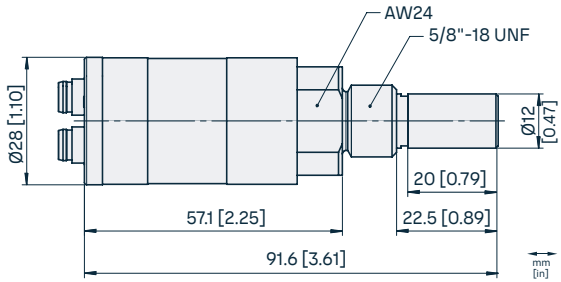

Figure 32 DMT143 with 5/8″-18 UNF thread

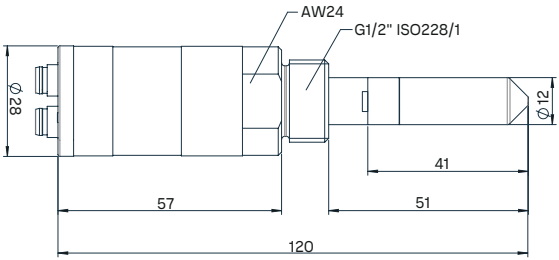

Figure 33 DMT143L dimensions

11.4 Spare parts and accessories

Table 30 DMT143 spare parts and accessories

Item	Item code
USB cable for PC connection [1)]	219690
M12 - M8 cable 1.5 m (4 ft 11 in), for connecting to Indigo80	262195SP
Loop powered external display	226476
Loop powered external display with relays	234759
Installation flange ISO ½	DM240FASP
Sintered filter (DMT143)	DRW010335SP
Stainless steel filter (DMT143, DMT143L)	HM47453SP
Stainless steel sintered filter (38 um) (DMT143L)	HM47280SP
Mounting nut	MOUNTINGNUTSP
Plug kit (ISO 1/2″)	218773
Plug kit (NPT 1/2″)	222507
Sealing ring set (3 pcs)	221525SP
NPT 1/2″ adapter for models with ISO1/2″ thread	210662SP
Mounting bracket	ASM216087SP
Output cables	
0.3 m (1 ft) shielded output cable M8, threaded connector	HMP50Z032SP

Item	Item code
3 m (9 ft 10 in) shielded output cable M8, threaded connector	HMP50Z300SP
5 m (16 ft 5 in) shielded output cable M8, threaded connector	HMP50Z500SP
10 m (32 ft 10 in) shielded output cable M8, threaded connector	HMP50Z1000SP
1.5 m (4 ft 11 in) heavy duty cable	225777SP
3 m (9 ft 10 in) heavy duty cable	225229SP
Sampling cells	
Basic sampling cell	DMT242SC
With 1/4″ Swagelok male connectors	DMT242SC2
With 1/4″ Swagelok VCR connectors	DSCVCR14
With UNF 5/8″-18 thread	DSC74UNF58SP
With quick connector and leak screw	DSC74SP
Two-pressure sampling cell	DSC74BSP
Two-pressure sampling cell with coil	DSC74CSP
Cooling/venting coil	DMCOILSP

1) Vaisala Insight software for Windows is available at vaisala.com/insight.

Accessories, spare parts, and calibration and repair products are available online at store.vaisala.com.

12. Vaisala services

12.1 Service centers

Vaisala offers comprehensive customer care throughout the product life cycle. Our service centers offer maintenance, calibration, upgrade, and repair services. All the services are provided worldwide with fast deliveries. For more information, go to vaisala.com/services.

The services are available from:

- Vaisala Online Store, store.vaisala.com
- Vaisala Services, helpdesk@vaisala.com

12.2 Technical support

You can contact Vaisala technical support at vaisala.my.site.com/myvaisala or helpdesk@vaisala.com. You can find all our support channels at vaisala.com/support.

When contacting technical support, provide the following as applicable:

- Product name, model, and serial number
- Software/Firmware version
- Name and location of the installation site
- Name and contact information of a technical person who can provide further information
- Diagnostics package for the application

If applicable, also provide the following details:

- What failed (what worked / did not work)?
- Where did it fail (location and environment)?
- When did it fail (date, immediately / after a while / periodically / randomly)?
- How many failed (only one defect / other same or similar defects / several failures in one unit)?
- What was done when the failure was noticed?
- What was connected to the product and to which connectors?
- What is the input power source type, voltage, and what else (such as lighting, heaters, and motors) was connected to the same power output?
- Are all parts connected and grounded properly? Take a photo to help the troubleshooting.

12.3 Warranty

For warranty terms and conditions and the warranty claim process, see vaisala.com/warranty.

Note that warranty coverage may not apply if the product is damaged due to normal wear and tear, exceptional operating conditions, negligent handling or installation, or unauthorized modifications. See the applicable supply contract or Conditions of Sale for details of the warranty for each product.

Appendix A. Modbus reference

A.1 Default communication settings

The following table lists the default Modbus serial settings of devices ordered with the Modbus configuration option.

Table 31 Default Modbus serial communication settings

Property	Description / Value
Serial bit rate	19200
Parity	N
Number of data bits	8
Number of stop bits	2
Modbus device address	240
Serial delay	0
Communication mode	Modbus RTU

A.2 Function codes

Table 32 Modbus function codes

Function code (decimal)	Function code (hexadecimal)	Name
03	0x03	Read Holding Registers
16	0x10	Write Multiple Registers
43 / 14	0x2B / 0x0E	Read Device Identification

A.3 Data encoding

In the data registers, the numeric values are available in one or two formats with separate register addresses: 32-bit IEEE floating point format and/or 16-bit signed integer format.

A.3.1 32-bit floating point or 32-bit integer format

Registers using **32-bit float** data format are encoded using the **binary32** encoding defined in IEEE 754. The format is also known as "single-precision floating point format".

The least significant 16 bits of a floating point number are placed at the Modbus register listed in the table, while the most significant 16 bits are placed in the register with number/address + 1, as specified in Open Modbus TCP Specification, Release 1.0. This is also known as "little-endian" or "Modicon" word order.

Despite the specification, some Modbus masters may expect a "big-endian" word order (most significant word first). In such case, you must select "word-swapped" floating point format in your Modbus master for the Modbus registers of the device.

A complete 32-bit floating point or 32-bit integer value should be read and written in a single Modbus transaction.

CAUTION! Reading the measurement data registers with incorrect floating point format setting may occasionally result in correct-looking, but nevertheless incorrect values.

It is highly recommended to verify that you have configured the floating point format correctly on your Modbus host system by reading a floating point value from a test value register.

A.3.2 16-bit integer format

Some 16-bit integer values in the data registers are scaled to include the necessary decimals. The scaling factors for those values are shown in the register tables.

Table 33 Interpretation of 16-bit signed integer values

Value (decimal)	Value (hexadecimal)	Description
0–32766	0x0000–0x7FFE	Value in range 0–32766
32767	0x7FFF	Value is 32767 or larger
32768	0x8000	Value is not available
32769	0x8001	Value is −32767 or smaller
32770–65535	0x8002–0xFFFF	Value in range −32766 ... −1 (2's complement)

A.4 Modbus registers

Registers are numbered in decimal, starting from 1. Register addresses in actual Modbus messages (Modbus Protocol Data Unit (PDU)) are in hexadecimal and start from zero. Register number 1 corresponds to address 0x0 in the actual Modbus message.

CAUTION! Reading the wrong register(s) may result in correct-looking values. Check the reference documentation of your Modbus host (PLC) to verify which notation it uses for Modbus register addresses.

A.4.1 Measurement data registers

Table 34 Modbus measurement data registers (read-only)

Register number	Address	Description	Data format	Unit
7	0x0006	Dew/frost point temperature ($T_{d/f}$)	32-bit float	°C
9	0x0008	Dew point temperature (T_d)	32-bit float	°C
11	0x000A	Dew/frost point temperature at 1 atm ($T_{d/fa}$)	32-bit float	°C
21	0x0014	Water concentration (ppm)	32-bit float	ppm
260	0x0103	Dew/frost point temperature ($T_{d/f}$*100)	16-bit signed integer	°C
261	0x0104	Dew point temperature (T_d*100)	16-bit signed integer	°C
262	0x0105	Dew/frost point temperature at 1 atm ($T_{d/fa}$*100)	16-bit signed integer	°C
267	0x010A	Water concentration (ppm)	16-bit signed integer	ppm

A.4.2 Configuration registers

Table 35 Modbus configuration data registers (writable)

Register number	Address	Description	Data format	Unit / Valid range
Settings				
769	0x0300	Pressure, power-up default value	32-bit float	bar (absolute) 0.001–50

Register number	Address	Description	Data format	Unit / Valid range
Settings				
771	0x0302	Pressure	32-bit float	bar (absolute) 0.001–50
795	0x031A	Filtering factor	32-bit float	0.00001–1
Communication				
1537	0x0600	Address	16-bit integer	1–247
1538	0x0601	Bit rate (b/s)	16-bit integer	5 = 9600 6 = 19200
1539	0x0602	Parity, data, stop bits	16-bit integer	0 = N81 1 = N82 2 = E81 3 = E82 4 = O81 5 = O82
1540	0x0603	Response delay	16-bit integer	0–1020 ms
1541	0x0604	Interface mode	16-bit integer	6 = MODBUS
1542	0x0605	Restart device	16-bit integer	1 = Restart the device
LED Alarm				
3073	0x0C00	Indicator mode	16-bit integer	0 = Off 1 = Status only 2 = Alarm
3074	0x0C01	Alarm parameter	16-bit integer	6 = $T_{d/f}$
3075	0x0C02	Alarm setpoint	32-bit float	-70 °C ... +60 °C
Factory settings				
7681	0x1E00	Restore settings	16-bit integer	1 = Restore factory settings

A.4.3 Status registers

Table 36 Modbus status registers (read-only)

Register number (decimal)	Address (hexadecimal)	Register description	Data format	Notes
513	0x0200	Error status	16-bit integer	1 = No errors
514	0x0201	Online status	16-bit integer	1 = Data available 0 = Outputs frozen due to autocalibration or purge
515	0x0203	Error code	32-bit integer	0 = No errors

Table 37 Error codes on Modbus interface

Error code register value	Corresponding error
0	No errors.
1	Temperature measurement error. [44]
2	Humidity measurement error. [45]
64	Device settings corrupted. [50]
128	Additional configuration settings corrupted. [51]
256	Sensor coefficients corrupted. [52]
512	Main configuration settings corrupted. [53]
2048	Supply voltage out of range. [55]
65536	Non-volatile memory read/write failure. [57]
131072	Firmware checksum mismatch. [49]

If several errors are active at the same time, the Modbus Error Code register contains the sum of currently active error codes.

More information

- Error messages in Insight software (page 81)

A.4.4 Test value registers

Read the known test values from the test registers to verify the functionality of your Modbus implementation.

Table 38 Modbus test registers (read-only)

Register number (decimal)	Address (hexadecimal)	Register description	Data format	Value
7937	0x1F00	Signed integer	16-bit integer	-12345
7938	0x1F01	Floating point	32-bit float	-123.45
7940	0x1F03	Text string	7-character ASCII string	"-123.45"

A.5 Device identification objects

Table 39 Device identification objects

Object ID	Object ID (hexadecimal)	Object name	Example contents
0	0x00	VendorName	"Vaisala"
1	0x01	ProductCode	"DMT143"
2	0x02	MajorMinorVersion	"1.2.3" Software version of the device.
3	0x03	VendorUrl	"http://www.vaisala.com/"
4	0x04	ProductName	"Vaisala Dew Point Transmitter DMT143"
5	0x05	ModelName	"7E2A2A0A000" Configuration code of the device. Length and content of the code are model-specific.
128	0x80	SerialNumber [1)]	"K0710040"
129	0x81	CalibrationDate [1)]	"2025-08-31" Calibration date in YYYY-MM-DD format. Empty string if not set/valid.
130	0x82	CalibrationText [1)]	"Vaisala/HEL" Calibration information text. Empty string if not set/valid.

1) Vaisala-specific device information.

A.6 Exception responses

Table 40 Modbus exception responses

Code	Name	Reason
01	Illegal function	Unsupported function code
02	Illegal data address	Register address or Object ID out of valid ranges
03	Illegal data value	Otherwise invalid request

Accessing unavailable (temporarily missing) measurement data does not generate a Modbus exception. “Unavailable” value (a quiet NaN for floating point data or 0x8000 for integer data) is returned instead. An exception is generated only for any access outside the applicable register ranges.

A.7 Modbus communication examples

Reading dew point/frost point temperature value

Device address used in the following examples is 240 (0xF0).
Measurement values returned by the device change depending on ambient conditions and/or device settings.

Request		Response	
Bytes on the line (hexadecimal)	**Description**	**Bytes on the line (hexadecimal)**	**Description**
(silence for 3.5 bytes)	Start of Modbus RTU frame	(silence for 3.5 bytes)	Start of Modbus RTU frame
0xF0	Transmitter address	0xF0	Transmitter address
0x03	Function (Read Holding Registers)	0x03	Function (Read Holding Registers)
0x00	Register address	0x04	Number of data bytes
0x06		0xF5	Value of first register (least significant word)
0x00	Number of 16-bit registers to read (2)	0x96	
0x02		0xC0	Value of second register (most significant word)
0x31	Modbus RTU checksum	0xE7	
0x2B		0xD9	Modbus RTU checksum
(silence for 3.5 bytes)	End of Modbus RTU frame	0x56	
		(silence for 3.5 bytes)	End of Modbus RTU frame

Communication description	
Register address	7 (1-based Modbus documentation format) = address 0x0006 (0-based format used in actual communication).
Data format	Two 16-bit Modbus registers interpreted as IEEE 754 binary32 floating point value, least significant word first.
Returned value	0xC0E7F596, which is binary32 representation of -7.25 (°C).

Writing filtering factor value

Request		Response	
Bytes on the line (hexadecimal)	**Description**	**Bytes on the line (hexadecimal)**	**Description**
(silence for 3.5 bytes)	Start of Modbus RTU frame	(silence for 3.5 bytes)	Start of Modbus RTU frame
0xF0	Transmitter address	0xF0	Transmitter address
0x10	Function (Write Multiple Registers)	0x10	Function (Write Multiple Registers)
0x03	Register address	0x03	Register address
0x1A		0x1A	
0x00	Number of registers to write (2)	0x00	Number of 16-bit registers written (2)
0x02		0x02	
0x04	Number of data bytes	0x75	Modbus RTU checksum
0xCC	Value for the first register (least significant word)	0x6A	
0xCD		(silence for 3.5 bytes)	End of Modbus RTU frame
0x3E	Value for the second register (most significant word)	The response to a write function informs that the function was correctly received by the device. It does not guarantee that the written value was accepted by the device (for example, in case of out-of-range values). To verify that the value was really accepted by the device, read the register value after writing.	
0x4C			
0xDE	Modbus RTU checksum		
0xE9			
(silence for 3.5 bytes)	End of Modbus RTU frame		

Communication description	
Register address	795 (1-based Modbus documentation format) = address 0x031A (0-based format used in actual communication).
Data format	Two 16-bit Modbus registers interpreted as IEEE 754 binary32 floating point value, least significant word first.
Value to write	0.2, in binary32 format 0x3E4CCCCD.

Recycling

Recycle all applicable material according to local regulations.

VAISALA

vaisala.com

AKRIBIS · www.akribis.info · contacto@akribis.info