USER GUIDE

DMT132

Vaisala · Authorized Partner

Distributed by AKRIBIS

M211289EN-B

User Guide

Vaisala HUMICAP® Dew Point Transmitter

DMT132

VAISALA

AKRIBIS · www.akribis.info · contacto@akribis.info

PUBLISHED BY

Vaisala Oyj
Vanha Nurmijärventie 21, FI-01670 Vantaa, Finland
P.O. Box 26, FI-00421 Helsinki, Finland
+358 9 8949 1

Visit our Internet pages at www.vaisala.com.

© Vaisala Oyj 2018

No part of this manual may be reproduced, published or publicly displayed in any form or by any means, electronic or mechanical (including photocopying), nor may its contents be modified, translated, adapted, sold or disclosed to a third party without prior written permission of the copyright holder. Translated manuals and translated portions of multilingual documents are based on the original English versions. In ambiguous cases, the English versions are applicable, not the translations.

The contents of this manual are subject to change without prior notice.

Local rules and regulations may vary and they shall take precedence over the information contained in this manual. Vaisala makes no representations on this manual's compliance with the local rules and regulations applicable at any given time, and hereby disclaims any and all responsibilities related thereto.

This manual does not create any legally binding obligations for Vaisala towards customers or end users. All legally binding obligations and agreements are included exclusively in the applicable supply contract or the General Conditions of Sale and General Conditions of Service of Vaisala.

This product contains software developed by Vaisala or third parties. Use of the software is governed by license terms and conditions included in the applicable supply contract or, in the absence of separate license terms and conditions, by the General License Conditions of Vaisala Group.

Table of Contents

1. About This Document 5
1.1 Version Information 5
1.2 Related Manuals 5
1.3 Documentation Conventions 5
1.4 Trademarks 6

2. Product Overview 7
2.1 Introduction to DMT132 7
2.2 Basic Features and Options 8
2.3 Transmitter Structure 8
2.4 LED Indicator Plug (Optional) 9
2.5 Special Cover Set for HMK15 (Optional) 10
2.6 NPT Adapter (Optional) 11
2.7 Loop-Powered Display (Optional) 11
2.8 Connection Cables 12
2.9 Sampling Accessories 13
2.10 Safety 13
2.10.1 ESD Protection 14
2.11 Regulatory Compliances 14

3. Installation 15
3.1 Selecting Location 15
3.2 Installing Transmitter 16
3.3 Wiring 19
3.3.1 Power Supply Requirements 20
3.4 Sampling from a Process 21
3.5 Sampling Accessories for DMT132 21
3.5.1 DMT242SC Sampling Cell 21
3.5.2 DMT242SC2 Sampling Cell with Swagelok® Connectors 22
3.5.3 DSC74 Sampling Cell with Quick Connector and Leak Screw 22
3.5.4 DSC74B Two-Pressure Sampling Cell 23

4. Operation 29
4.1 Getting Started 29
4.2 Serial Communication 29
4.2.1 Connecting to Serial Interface 29
4.2.2 Terminal Application Settings 30
4.3 List of Serial Commands 31
4.4 Device Information and Status 32
4.4.1 Show Device Information 32
4.4.2 Show Available Measurement Parameters 33
4.4.3 Show Firmware Version 33
4.4.4 Show Software Information 33
4.5 Configuring Analog Output 34
4.5.1 Set Analog Output Measurement Parameter and Scaling 34
4.5.2 Set Analog Output Error Notification 35
4.6 Configuring Measurement Parameters 36
4.6.1 Set Pressure Value for Dew Point Calculation 36

4.7 Serial Line Output Commands....37
4.7.1 Output a Reading Once.... 37
4.8 Troubleshooting and Maintenance Commands....37
4.8.1 Display Currently Active Errors....37
4.8.2 Test Analog Output.... 38
4.8.3 Set LED Indicator Level....38
4.9 Calibration and Adjustment Commands....39
4.9.1 Calibrate Humidity Measurement....39
4.9.2 Calibrate Temperature Measurement.... 40
4.9.3 Adjust Capacitance Measurement....41
4.9.4 View User Adjustment Parameters.... 42
4.9.5 Set User Adjustment Parameters.... 42
4.10 Other Commands....43
4.10.1 Display Command List.... 43
4.10.2 Reset Transmitter.... 43
4.10.3 Restore Factory Settings....44

5. Maintenance....45
5.1 Cleaning Transmitter.... 45
5.2 Changing Filter....45
5.3 Changing Sensor....46
5.4 Calibration and Adjustment....47
5.4.1 Field Check Using DM70....48
5.4.2 Humidity Calibration and Adjustment (RHCAL).... 50
5.4.3 Temperature Calibration and Adjustment (CT).... 53
5.4.4 Capacitance Adjustment (CRH)....55

6. Troubleshooting.... 59
6.1 Typical Problems.... 59
6.2 Error State....59
6.3 Error Codes....60

7. Technical Data....63
7.1 Dimensions.... 65
7.2 Spare Parts and Accessories.... 66

Warranty....67

Technical Support....67

Recycling....67

AKRIBIS · www.akribis.info · contacto@akribis.info

List of Figures

Figure 1 Vaisala HUMICAP® Dew Point Transmitter DMT132 ... 8
Figure 2 DMT132 Transmitter Structure ... 9
Figure 3 DMT132 with LED Indicator Plug ... 10
Figure 4 Special Cover Set for HMK15 ... 10
Figure 5 DMT132 with NPT Adapter ... 11
Figure 6 Nokeval 301 Loop-Powered Display ... 12
Figure 7 Cable with Threaded Connector ... 13
Figure 8 USB Service Cable ... 13
Figure 9 Removing the Transport Protection Cap ... 16
Figure 10 Installing the Transmitter ... 17
Figure 11 Tightening by Hand ... 17
Figure 12 Tightening with Plastic Wrench ... 18
Figure 13 Connecting the Cable and LED Indicator Plug ... 19
Figure 14 Connectors I and II ... 20
Figure 15 Connector Pinout ... 20
Figure 16 Sampling Cells DMT242SC2 (Left) and DMT242SC (Right) ... 22
Figure 17 DSC74 Sampling Cell with Accessories ... 23
Figure 18 DSC74B ... 24
Figure 19 Removing the Leak Screw ... 25
Figure 20 Default Assembly of DSC74C ... 26
Figure 21 Alternative Assembly of DSC74C (for Tight Spaces) ... 27
Figure 22 DM240FA Duct Installation Flange with DMT132 ... 28
Figure 23 PuTTY Terminal Application ... 31
Figure 24 Opening the Filter ... 45
Figure 25 Filter Structure ... 46
Figure 26 Removing the HUMICAP® 180R Sensor ... 47
Figure 27 Calibrating DMT132 Using HMK15 and USB Cable ... 50
Figure 28 Accuracy Over Temperature Range ... 63
Figure 29 DMT132 Dimensions ... 65
Figure 30 Dimensions with NPT Adapter and LED Plug ... 65

AKRIBIS · www.akribis.info · contacto@akribis.info

List of Tables

Table 1 Document Versions....5
Table 2 Related Manuals.... 5
Table 3 DMT132 Measurement Parameters.... 7
Table 4 Connector Pinouts....19
Table 5 DMT132 Serial Interface Settings....30
Table 6 DMT132 Serial Commands.... 31
Table 7 Pressure Conversion Coefficients....36
Table 8 Error Codes.... 60
Table 9 Measurement Performance....63
Table 10 Operating Environment.... 63
Table 11 Outputs.... 64
Table 12 Mechanical Specifications.... 64
Table 13 Output Cable Specifications....64
Table 14 Spare Parts and Accessories.... 66

AKRIBIS · www.akribis.info · contacto@akribis.info

1. About This Document

1.1 Version Information

This document provides instructions for installing, operating, and maintaining Vaisala HUMICAP® Dew Point Transmitter DMT132.

Table 1 Document Versions

Document Code	Date	Description
M211289EN-B	August 2018	This manual. Changes since the previous version: • Note about pressure compensation setting added in Calibration and Adjustment (page 47) • Technical specifications updated with regard to measurement range, response time, and operating temperature • Patent Notice section removed
M211289EN-A	March 2011	First version.

1.2 Related Manuals

Table 2 Related Manuals

Document Code	Name
M211288EN	*Vaisala HUMICAP® Dewpoint Transmitter DMT132 Quick Guide*
M210185EN	*Vaisala Humidity Calibrator HMK15 User's Guide*

1.3 Documentation Conventions

WARNING! Warning alerts you to a serious hazard. If you do not read and follow instructions carefully at this point, there is a risk of injury or even death.

CAUTION! Caution warns you of a potential hazard. If you do not read and follow instructions carefully at this point, the product could be damaged or important data could be lost.

AKRIBIS · www.akribis.info · contacto@akribis.info

Note highlights important information on using the product.

Tip gives information for using the product more efficiently.

Lists tools needed to perform the task.

Indicates that you need to take some notes during the task.

1.4 Trademarks

Vaisala® and HUMICAP® are registered trademarks of Vaisala Oyj.

Windows® is either a registered trademark or trademark of Microsoft Corporation in the United States and other countries.

All other product or company names that may be mentioned in this publication are trade names, trademarks, or registered trademarks of their respective owners.

AKRIBIS · www.akribis.info · contacto@akribis.info

2. Product Overview

2.1 Introduction to DMT132

The Vaisala HUMICAP® Dew Point Transmitter DMT132 measures dew point temperature within measurement range -30 ... +50 °C (-22 ... +122 °F) T_d. The DMT132 is designed for OEM applications that require dew point measurement in this range, such as refrigeration dryers.

The transmitter is easy to install, and the mechanics have been designed for harsh environments requiring protection against dust, dirt, and splashed water.

The excellent stability and reliability of the transmitter's performance is based on advanced HUMICAP® polymer sensor technology. The HUMICAP® technology has low maintenance needs due to its excellent long-term stability and durability against condensation.

Table 3 DMT132 Measurement Parameters

Parameter	Abbreviation	Metric Unit	Non Metric Unit
Dew point/frost point temperature	$T_{d/f}$	°C	°F
Dew point/frost point temperature in atmospheric pressure	$T_{d/f}$ atm	°C	°F

Dew point temperature ($T_{d/f}$) is the primary measurement parameter of the DMT132. Dew point temperature in atmospheric pressure ($T_{d/f}$ atm) is a calculated measurement parameter that presents the dew point the gas would have at atmospheric pressure. For this calculation to provide accurate results, it is important to have the correct pressure setting stored in the transmitter. This setting is specified on the order form, and it can be changed using the service port. See Set Pressure Value for Dew Point Calculation (page 36).

When dew point is below 0 °C, the transmitter outputs frost point for T_d.

AKRIBIS · www.akribis.info · contacto@akribis.info

Figure 1 Vaisala HUMICAP® Dew Point Transmitter DMT132

2.2 Basic Features and Options

- Dew point measurement range -30 ... +50 °C (-22 ... +122 °F) T_d
- Output in $T_{d/f}$ or $T_{d/f}$ atm (calculated measurement parameter)
- HUMICAP® polymer sensor
- Small size to fit in tight installations
- One scalable 2-wire current loop output, 4 ... 20 mA
- Configurable analog output level for error notification
- Field check suitability with MI70 hand-held indicator
- Optional accessories:
  - USB service cable for configuration and calibration
  - LED indicator plug that enables a visual indication of transmitter status: LED lit when dew point is above set limit, blinking for malfunction alarm
  - Special cover set for HMK15 Humidity Calibrator
  - Adapter for mounting on NPT 1/2″ threaded mounting points
  - Loop-powered display
  - Various sampling cells with different installation options

2.3 Transmitter Structure

The structure of the DMT132 is shown in Figure 2 (page 9). The transmitter body does not have user serviceable parts inside, and is not designed to be opened. Opening the transmitter will void the warranty.

AKRIBIS · www.akribis.info · contacto@akribis.info

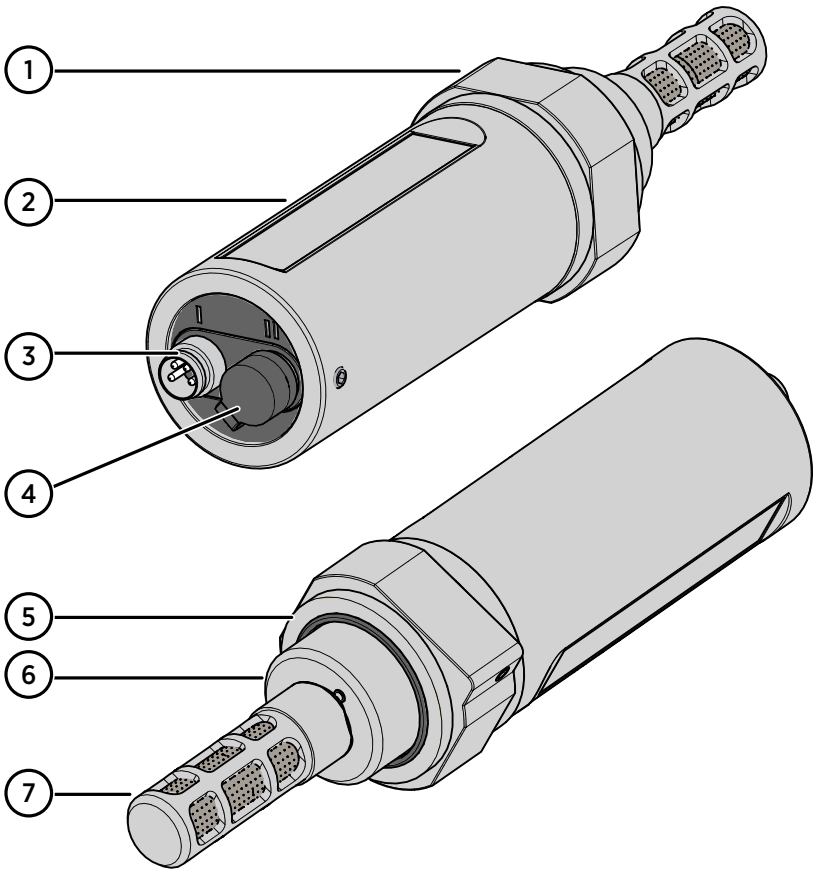

Figure 2 DMT132 Transmitter Structure

1 30-mm nut
2 Transmitter body
3 4-pin M8 connector I: analog output and operating power
4 4-pin M8 connector II (shown with protective cap): Connection for service port (RS-485, service use only) and LED indicator plug
5 Sealing ring (included with every transmitter)
6 Connection thread (ISO G1/2″)
7 Tube filter that protects the HUMICAP® and Pt1000 sensors

When the transmitter is delivered, the filter is protected by a yellow transport protection cap that keeps the sensor dry. The transport protection cap should be left on the transmitter during storage. Remove the transport protection cap before installing the transmitter.

2.4 LED Indicator Plug (Optional)

The service port (connector II) of the DMT132 can be equipped with a LED indicator plug (Vaisala order code 230388). The red LED on the plug will light up when the measured dew point temperature is above the set limit. If the transmitter is in error condition, the LED will blink.

AKRIBIS · www.akribis.info · contacto@akribis.info

Figure 3 DMT132 with LED Indicator Plug

The dew point limit for the LED indication can be changed using the service port; see Serial Communication (page 29).

2.5 Special Cover Set for HMK15 (Optional)

To use the Vaisala Humidity Calibrator HMK15 with the DMT132 you need the special cover set (Vaisala order code 230914). The cover set includes one salt jar cover where one of the holes is specially designed for the DMT132, and rubber plugs for covering the unused holes.

The hole for DMT132 is raised higher than the others, and has an ISO G 1/2″ thread. The DMT132 can be mounted on the salt jar tightly using the thread, and without having to remove the filter.

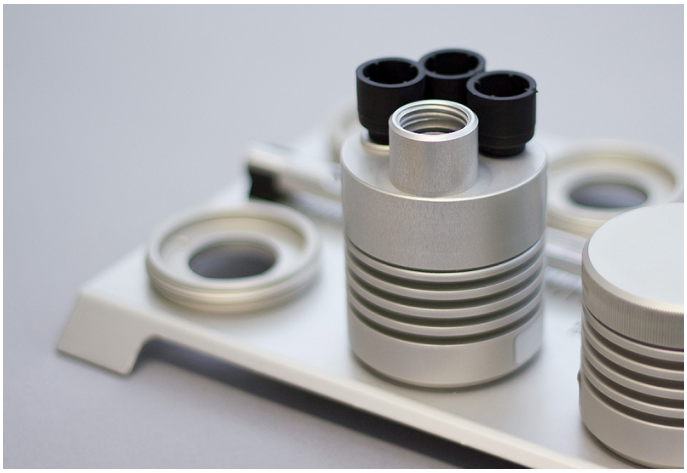

Figure 4 Special Cover Set for HMK15

AKRIBIS · www.akribis.info · contacto@akribis.info

2.6 NPT Adapter (Optional)

The DMT132 can be connected to NPT 1/2″ threaded mounting points using the optional NPT adapter (Vaisala order code 210662).

Figure 5 DMT132 with NPT Adapter

When the NPT adapter is used, the filter is partially covered by the adapter; see Figure 5 (page 11). This doubles the response time of the transmitter.
The adapter is suitable for use in compressed air lines and other systems with sufficient flow.

2.7 Loop-Powered Display (Optional)

The DMT132 can be connected to a loop-powered external LED display (type Nokeval 301, Vaisala order code 226476). The display provides a reading of the output measurement parameter. The display is powered by the 4 ... 20 mA current signal, so there is no need for an external power supply.

The display is delivered at its default settings. Configure the display functions and scaling according to the documentation delivered with the display.

AKRIBIS · www.akribis.info · contacto@akribis.info

Figure 6 Nokeval 301 Loop-Powered Display

The loop resistance of the display must be included in the loop resistance calculation for the complete current loop. See Power Supply Requirements (page 20).
For the loop resistance of the display, refer to the manufacturer's documentation.

2.8 Connection Cables

Vaisala supplies shielded cables with M8 female straight threaded connector. Available in four lengths:

- 0.3 m (1.0 ft)
- 3 m (9.8 ft)
- 5 m (16.4 ft)
- 10 m (32.8 ft)

Also available are cables for service port and field check use:

- USB service cable
- MI70 connection cable

AKRIBIS · www.akribis.info · contacto@akribis.info

Figure 7 Cable with Threaded Connector

Figure 8 USB Service Cable

More Information

- Spare Parts and Accessories (page 66)

2.9 Sampling Accessories

DMT132 is compatible with various sampling accessories. For more information on performing sampling, and a description of the accessories, see Sampling Accessories for DMT132 (page 21).

For order codes of sampling accessories, see Spare Parts and Accessories (page 66).

2.10 Safety

The Vaisala HUMICAP® Dew Point Transmitter DMT132 delivered to you has been tested for safety and approved as shipped from the factory. Note the following precautions:

AKRIBIS · www.akribis.info · contacto@akribis.info

WARNING! Ground the product and verify installation grounding periodically to minimize shock hazard.

CAUTION! Do not modify the unit or use it in ways not described in the documentation. Improper modification may lead to safety hazards, equipment damage, failure to perform according to specification, or decreased equipment lifetime.

2.10.1 ESD Protection

Electrostatic Discharge (ESD) can cause immediate or latent damage to electronic circuits. Vaisala products are adequately protected against ESD for their intended use. However, it is possible to damage the product by delivering an electrostatic discharge when touching, removing or inserting any objects inside the equipment housing.

Avoid touching component contacts or connectors when working with the device.

2.11 Regulatory Compliances

The Vaisala HUMICAP® Dew Point Transmitter DMT132 is in conformity with the provisions of the following EU directive:

- EMC-Directive (2004/108/EC)

Conformity is shown by compliance with the following standards:

- EN 61326-1: Electrical equipment for measurement, control, and laboratory use – EMC requirements – for use in industrial locations.
- EN 550022: Information technology equipment – Radio disturbance characteristics – Limits and methods of measurement

AKRIBIS · www.akribis.info · contacto@akribis.info

3. Installation

3.1 Selecting Location

It is important that the conditions at the point of installation represent well the gas to be measured. Temperature changes do not affect the dew point measurement, but pressure changes will have an effect on dew point. All leaks in the system must be eliminated to avoid ambient humidity affecting the measurement.

Direct installation to the measured gas is the recommended installation method if the temperature of the gas is suitable for DMT132 and no additional filtering is needed due to very dusty or oily gas. Oil as such is not harmful for the HUMICAP® sensor, but response time may be slower if there are oil particles in the system, or if oil is collected to the filter over a longer period of time. The maximum measurement pressure is 20 bar_a / 290 psi_a (absolute pressure) for direct measurement.

If the gas temperature is higher than the specified maximum operating temperature of the transmitter, gas sampling and cooling it to ambient temperature (for example, 20 °C / 68 °F) is recommended. Note that the dew point temperature must be clearly lower than the ambient temperature to avoid condensation in the sampling line. Sampling from the process is easy by using Vaisala sampling cell options.

The DMT132 is light in weight, which means that it can be installed in a sample pipeline in the sampling cells without the need for any additional mechanical support.

More Information

- Sampling Accessories for DMT132 (page 21)

AKRIBIS · www.akribis.info · contacto@akribis.info

3.2 Installing Transmitter

Before proceeding with the installation, select first a suitable measurement location. See Selecting Location (page 15).

1. Remove the yellow transport protection cap from the transmitter.

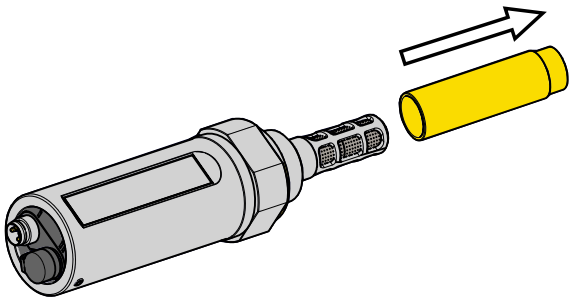

Figure 9 Removing the Transport Protection Cap

2. If you are using the optional NPT adapter, apply PTFE tape or suitable paste sealant to the outer thread of the adapter. Follow the application instructions of the sealant.
3. Install the adapter to the mounting point.

AKRIBIS · www.akribis.info · contacto@akribis.info

4. Make sure that the threads on the mounting point are of the correct type, and fasten the transmitter to the measurement point. Always leave the sealing ring in place, it is always needed to achieve a tight installation. Use your hands to turn the transmitter from the 30 mm nut until it feels tight. Do not use force at this point, and check that the sealing ring remains centered.

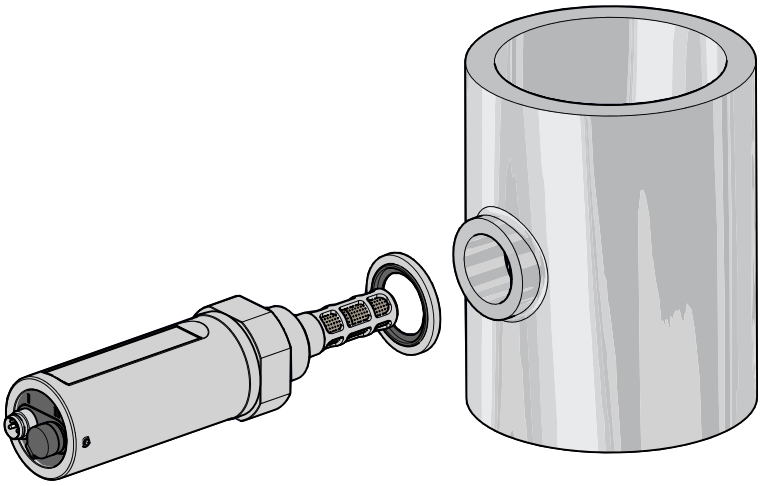

Figure 10 Installing the Transmitter

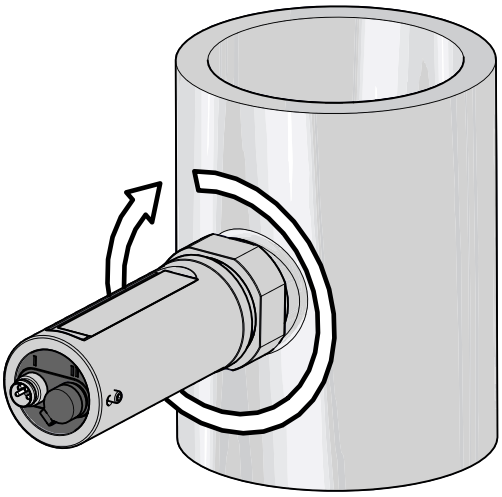

Figure 11 Tightening by Hand

5. Use the supplied plastic 30 mm wrench to tighten the connection. Sufficient tightness is achieved by turning 20 degrees after the point achieved by hand.

CAUTION! Only tighten the transmitter from the 30 mm nut. Do NOT apply force to other points in the transmitter body.

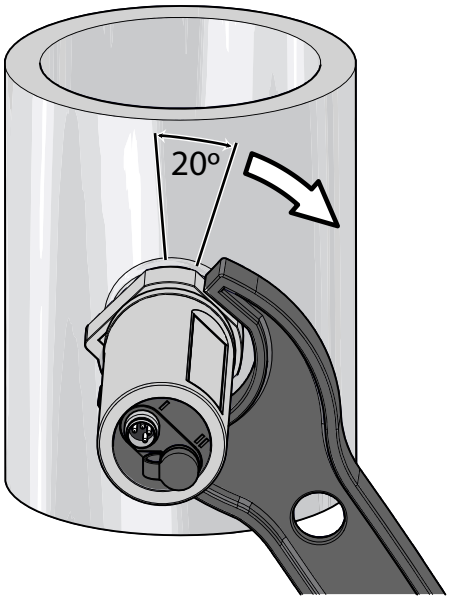

Figure 12 Tightening with Plastic Wrench

6. Connect the wires of the connection cable. When using cables provided with DMT132, refer to Wiring (page 19). See also Power Supply Requirements (page 20).

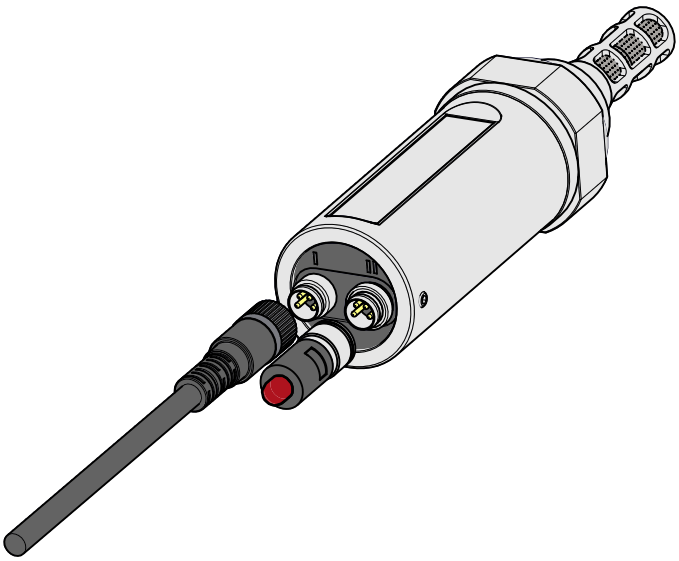

Figure 13 Connecting the Cable and LED Indicator Plug

7. Plug in the cable to connector I of the transmitter and tighten it. For connector pinout, see Wiring (page 19).
8. If you have the LED indicator plug option, plug it in to connector II of the transmitter and tighten it.
9. Turn on the power supply to start up the DMT132. The analog output will stabilize in five seconds after start-up.

3.3 Wiring

CAUTION! The power supply lines on connector II are intended for use by the USB service cable and the MI70 hand-held indicator. Do not connect other power supplies to connector II.

Table 4 Connector Pinouts

Pin	Connector I	Connector II	Wire color
1	VDC supply+	VDC supply+	Brown
2	Not connected	RS-485 D0-	White
3	GND	GND	Blue
4	Not connected	RS-485 D1+	Black

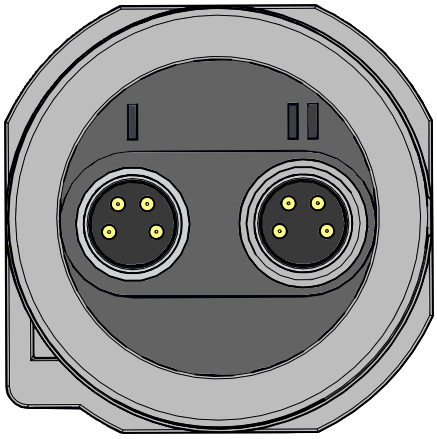

Figure 14 Connectors I and II

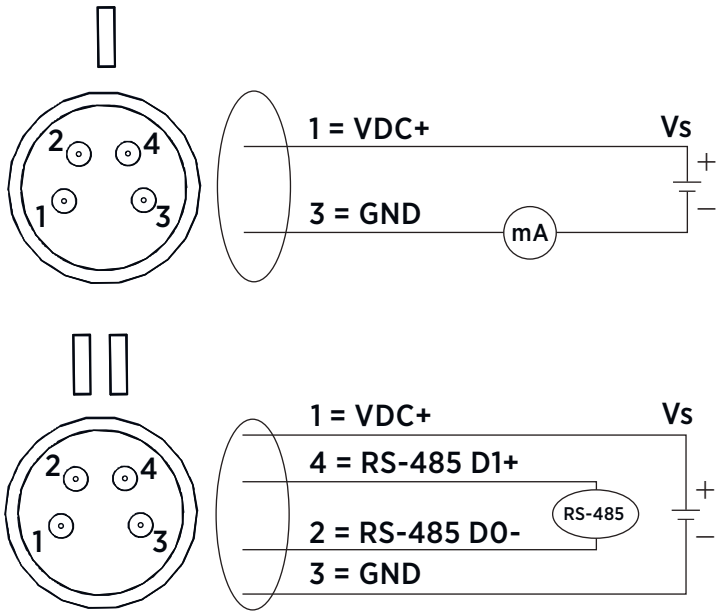

Figure 15 Connector Pinout

3.3.1 Power Supply Requirements

The DMT132 transmitters are designed to operate with a supply voltage of 10 ... 28 VDC. The allowed voltage range depends on the loop resistance (R_L):

- For R_L 0 ... 100 Ω, supply voltage range is 10 ... 20 VDC
- For R_L 0 ... 500 Ω, supply voltage range is 20 ... 28 VDC

AKRIBIS · www.akribis.info · contacto@akribis.info

Maximum allowed R_L is 600 Ω, as long as the following equation applies:

$$U_{\min} = \frac{R_L}{40} + 7.5\ \text{V}$$

When R_L = 600 Ω, supply voltage range is 22.5 ... 28 VDC.

The DMT132 can be powered by the MI70 indicator or the USB service cable. You can plug in the MI70 indicator or the USB service cable while the transmitter is powered from connector I.

3.4 Sampling from a Process

Sampling is needed when direct measurement of the air or gas is not possible or desirable. This may be related to, for example, a high process temperature, protecting the sensor from water spikes, the need to easily detach the instrument from a pressurized process without running the whole process down, or wanting to make the measurement at a more convenient location.

Keep in mind that changing the pressure of a gas changes the dew point temperature of the gas. If the sensor is at a different pressure than the process itself, there may be an error of several tens of degrees in the dew point measurement.

Make sure there is sufficient flow of gas to the sensor (for example, 1 l/min) to give a representative sample.

You can use the Vaisala Humidity Calculator to simulate the effect of pressure change to dew point. The Humidity Calculator is available at: www.vaisala.com/humiditycalculator.

3.5 Sampling Accessories for DMT132

3.5.1 DMT242SC Sampling Cell

The DMT242SC is a basic sampling cell with only the main sampling cell body. The inlet and outlet are female threaded sample connectors (inlet G3/8″, outlet G1/4″ ISO). See Figure 16 (page 22).

The DMT242SC is suitable for users requiring only a sampling cell to fit the transmitter into and doing further assembly (piping into inlet and outlet, valves, possible flow meter) by themselves.

AKRIBIS · www.akribis.info · contacto@akribis.info

3.5.2 DMT242SC2 Sampling Cell with Swagelok Connectors

The DMT242SC2 is similar to DMT242SC, but connections are made easy. The sampling cell includes welded Swagelok connectors at both the inlet and outlet that fit directly to 1/4″ tubing.

To fit 6 mm tubing to the connectors, you can use an adapter such as Swagelok Reducer SS-6M0-R-4 (not supplied by Vaisala).

DMT242SC2 is the suitable choice in, for example, plastics drying systems, where the measurement is made by tapping off the dryer system and bringing a small air stream to the sensor. The Swagelok connectors of DMT242SC2 easily connect to a cooling coil or tubing, providing the essential function of cooling the dry air to ambient temperature before it reaches the sensor.

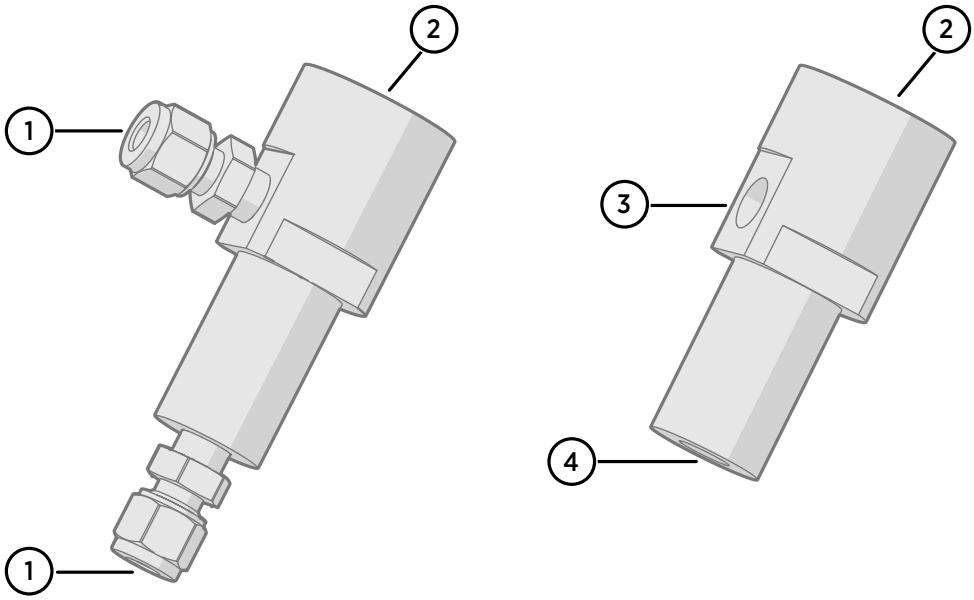

Figure 16 Sampling Cells DMT242SC2 (Left) and DMT242SC (Right)

1 Male pipe welded connector Swagelok 1/4″
2 G1/2″
3 G1/4″
4 G3/8″

3.5.3 DSC74 Sampling Cell with Quick Connector and Leak Screw

The DSC74 has been designed especially for compressed air lines. The sampling cell contains an adjustable leak screw that allows keeping up the pipeline pressure at the sensor. Use a screwdriver to open and close the leak screw. The leak screw should be 1/2 turn open. You can verify this by first closing the leak screw, then turning it 1/2 turn to open it. The air coming out will make a barely audible little hiss. You can feel it lightly when placing a hand in front of the air stream.

AKRIBIS · www.akribis.info · contacto@akribis.info

Do not open the leak screw more than 1/2 turn to avoid reducing the pressure in the sampling cell.

The DSC74 comes with a quick connector that fits to industry standard compressed air line connectors (suitable for type D, Quick08, NIP08). This allows for easy installation and detachment of the dew point transmitter without having to shut down the process. Alternative ways to connect are through the two different thread adapters (G3/8″ to G1/2″ and G3/8″ to G1/4″ ISO), supplied with each DSC74 unit.

When using the DSC74, seal the threads of the quick connector or thread adapter carefully with PTFE thread seal tape. Tighten with an open-end wrench.

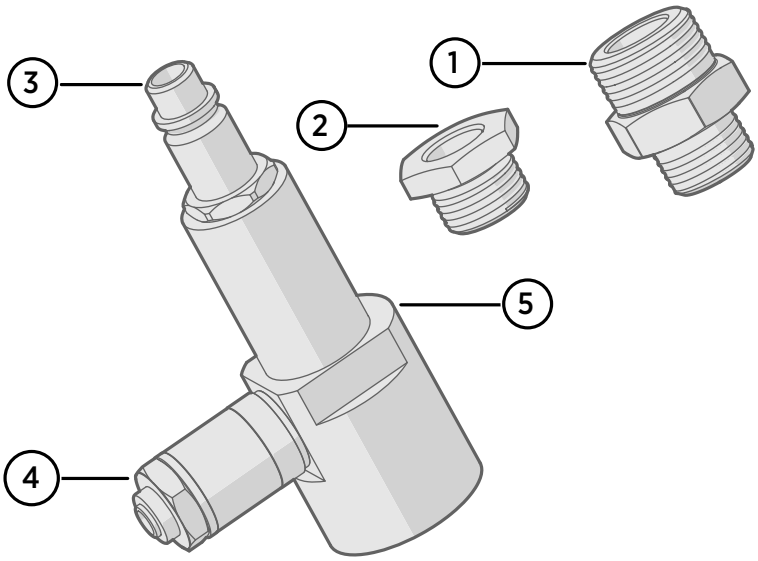

Figure 17 DSC74 Sampling Cell with Accessories

1 Thread adapter type G3/8″ to G1/2″
2 Thread adapter type G3/8″ to G1/4″
3 Quick connector
4 Leak screw
5 Sampling cell body (DMT242SC)

3.5.4 DSC74B Two-Pressure Sampling Cell

The DSC74B and DSC74C sampling cells are enhanced versions of the DSC74. The body is designed in a way that it is possible to measure at both system pressure and atmospheric pressure.

The DSC74B limits the flow rate with a fixed leak screw. The flow is optimized for pressures 3 ... 10 barg. The fixed leak screw eliminates the risk of opening the leak screw fully by accident and this way emptying a gas vessel. The maximum flow can be increased, if needed, by removing the leak screw and adjusting the flow manually with the valve. Harmful gases can be recovered by connecting a collection system at the outlet (not available from Vaisala).

In the basic operation of the DSC74B, the gas flows to the sensor from the front and the outlet is on the side. To have the measurement done at atmospheric pressure, the inlet and outlet are reversed. Then the reducing parts supplied (G3/8″ to G1/2″ or G3/8″ to G1/4″) on the outlet side help to protect the sensor from ambient humidity coming in.

DSC74B consists of the following parts:

- Sampling cell, thread 3/8″G
- Connection part with a needle valve and an integrated leak screw
- Reducing Nipple (thread adapter), G3/8″ to G1/2″
- Reducing Adapter (thread adapter), G3/8″ to G1/4″

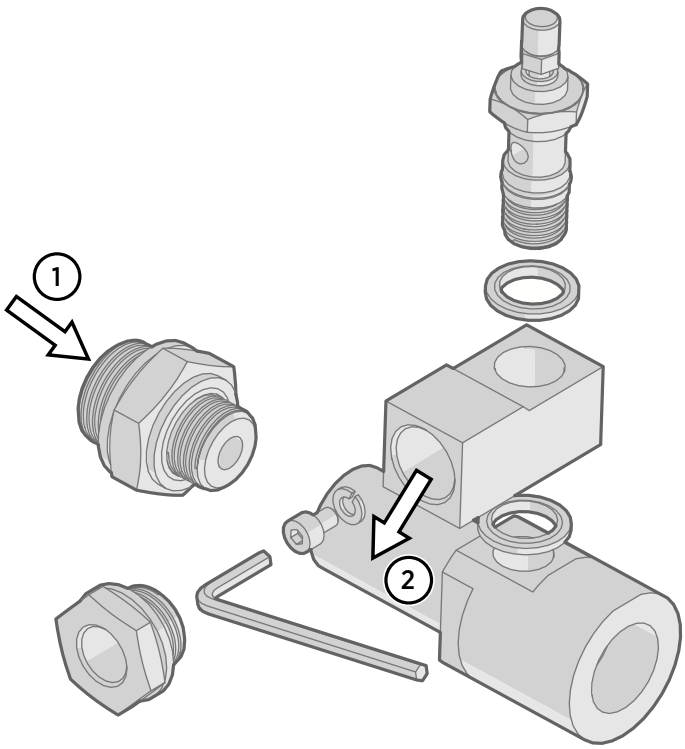

Figure 18 DSC74B

1 Gas goes in
2 Gas comes out

AKRIBIS · www.akribis.info · contacto@akribis.info

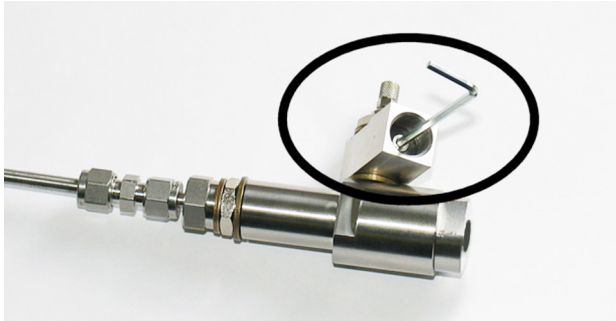

Figure 19 Removing the Leak Screw

3.5.4.1 DSC74C Two-Pressure Sampling Cell with Coil

The DSC74C with an outlet coil is designed for the most critical measurements at atmospheric pressure. In the DSC74C, the coil is connected to the sampling cell outlet to protect the sensor from ambient humidity disturbing the measurement. The coil can also be used as a cooling coil for sampling from high temperature processes.

DSC74C consists of the following parts:

- Sampling cell, thread G3/8″
- Connection part with a needle valve and an integrated leak screw
- Reducing Nipple (thread adapter), G3/8″ to G1/2″
- Reducing Adapter (thread adapter), G3/8″ to G1/4″
- Diffusion coil (for measurements in atmospheric pressure)

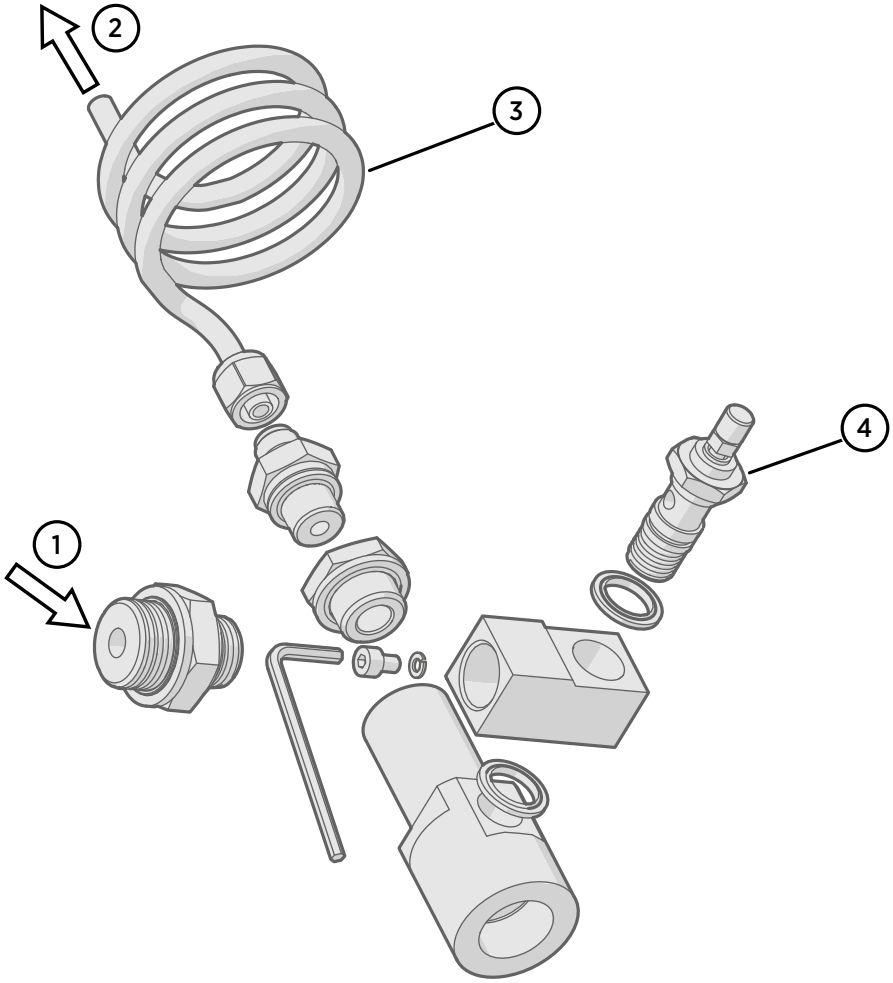

Figure 20 Default Assembly of DSC74C

1 Gas goes in. The coil can also be used here.
2 Gas comes out
3 Coil
4 Valve

AKRIBIS · www.akribis.info · contacto@akribis.info

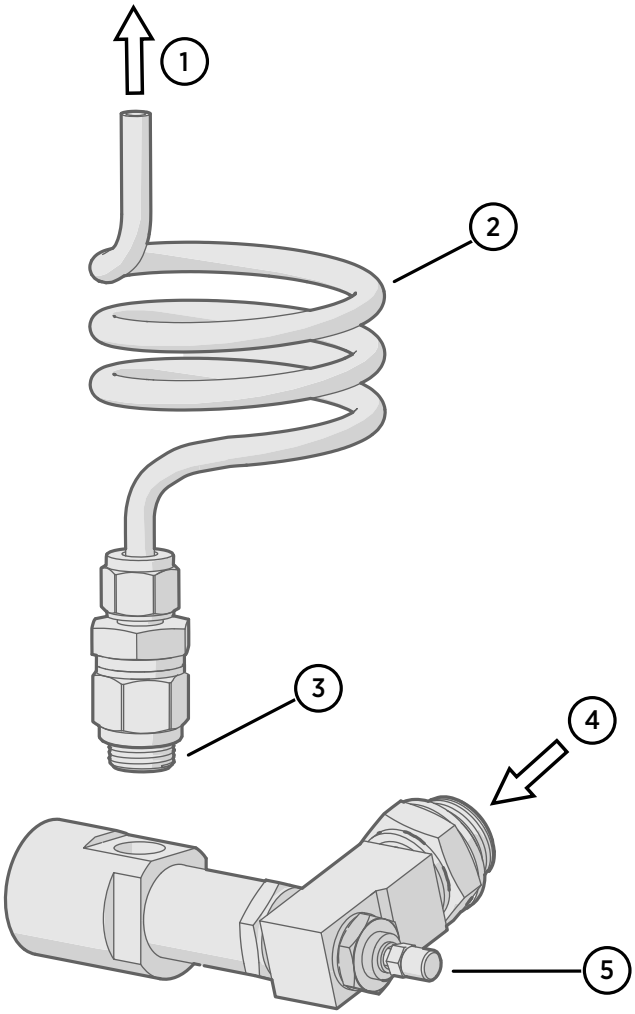

Figure 21 Alternative Assembly of DSC74C (for Tight Spaces)

1 Gas comes out
2 Coil
3 Thread, max. size 7 mm
4 Gas goes in
5 Valve

The thread size cannot exceed 7 mm. Use the provided adapter to avoid damage to the transmitter.

3.5.4.2 DM240FA Duct Installation Flange

The transmitter can be installed directly in the process wall through DM240FA duct installation flange. When the transmitter is installed directly on the process wall or pipe, note that a closing valve may be needed on both sides of the installed transmitter so that the sensor head can be removed from the process for calibration or maintenance.

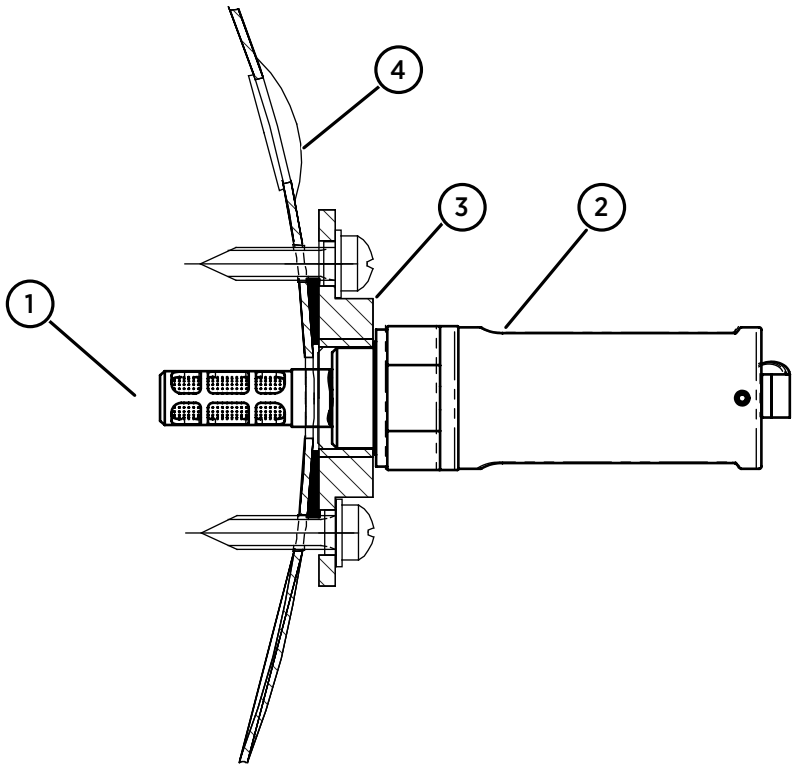

Figure 22 DM240FA Duct Installation Flange with DMT132

1 Measured gas
2 DMT132 transmitter
3 DM240FA flange (thread G1/2″ ISO)
4 Recommended additional hole (plugged) for T_d field check reference measurement probe (for example, Vaisala DM70)

AKRIBIS · www.akribis.info · contacto@akribis.info

4. Operation

4.1 Getting Started

When the transmitter is connected to power supply, there is a delay of three seconds as the transmitter starts up and the analog output stabilizes. If the LED indicator plug is connected, it will blink once at start-up.

4.2 Serial Communication

4.2.1 Connecting to Serial Interface

The DMT132 can be connected to a PC using the RS-485 line on Port II. It is recommended that you use the USB service cable (Vaisala order code 219690) for the connection, since the cable also provides the operating power from the USB port.

The RS-485 line is intended for service use only.

If you have not used the USB service cable before, install the driver that came with the cable. See Installing Driver for USB Service Cable (page 29).

4.2.1.1 Installing Driver for USB Service Cable

Before taking the USB service cable into use, you must install the provided USB driver on your PC. When installing the driver, you must acknowledge any security prompts that may appear. The driver is compatible with Windows 7, Windows 8, and Windows 10.

1. Check that the USB service cable is not connected. Disconnect the cable if you have already connected it.
2. Insert the media that came with the cable, or download the driver from www.vaisala.com/software.
3. Execute the USB driver installation program (setup.exe), and accept the installation defaults. The installation of the driver may take several minutes.
4. After the driver has been installed, connect the USB service cable to a USB port on your PC. Windows will detect the new device, and use the driver automatically.
5. The installation has reserved a COM port for the cable. Verify the port number, and the status of the cable, using the **Vaisala USB Instrument Finder** program that has been installed in the Windows **Start** menu.

Windows will recognize each individual cable as a different device, and reserve a new COM port. Remember to use the correct port in the settings of your terminal program.

AKRIBIS · www.akribis.info · contacto@akribis.info

There is no reason to uninstall the driver for normal use. However, if you wish to remove the driver files and all Vaisala USB cable devices, you can do so by uninstalling the entry for **Vaisala USB Instrument Driver** in Windows **Control Panel**.

4.2.2 Terminal Application Settings

The serial interface settings of the DMT132 service port are presented in Table 5 (page 30). The settings cannot be changed by the user.

Table 5 DMT132 Serial Interface Settings

Property	Description / Value
Baud rate	19200
Parity	None
Data bits	8
Stop bits	1
Flow control	None

The steps below describe how to connect to the DMT132 using the PuTTY terminal application for Windows (available for download at www.vaisala.com/software) and a USB serial interface cable:

1. Connect the USB serial interface cable between your PC and the RS-485 port of the DMT132 (connector II).
2. Start the PuTTY application.
3. Select the **Serial** settings category, and check that the correct COM port is selected in the **Serial line to connect to** field.

   You can check which port the USB cable is using with the **Vaisala USB Instrument Finder program** that has been installed in the Windows **Start** menu.

4. Check that the other serial settings are correct for your connection, and change if necessary.
   Flow control should be set to **None** unless you have a reason to change it.
5. Select **Open** to open the connection window and start using the serial line.

   If PuTTY is unable to open the serial port you selected, it will show you an error message instead. If this happens, restart PuTTY and check the settings.

AKRIBIS · www.akribis.info · contacto@akribis.info

6. You may need to adjust the **Local echo** setting in the **Terminal** category to see what you are typing on the serial line. To access the configuration screen while a session is running, click the right mouse button over the session window, and select **Change Settings...** from the pop-up menu.

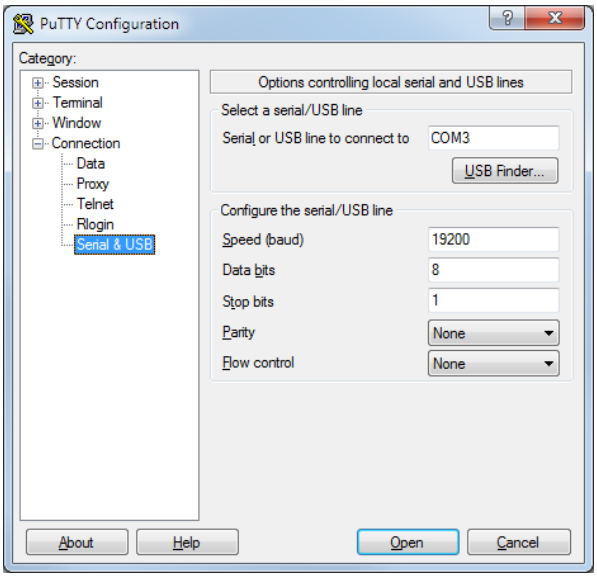

Figure 23 PuTTY Terminal Application

4.3 List of Serial Commands

All commands can be issued either in uppercase or lowercase. In the command examples, the keyboard input by the user is in **bold** type.

The notation <cr> refers to pressing the carriage return (**Enter**) key on your computer keyboard. Enter a <cr> to clear the command buffer before starting to enter commands.

Table 6 DMT132 Serial Commands

Command	Description
?	Show device information
AERR	Set analog output device malfunction error mode
ALARM	Set analog output limit alarm modes
ASEL	Configure analog output measurement parameters ("quantities") and scaling
ATEST	Test analog outputs
CALCS	Show available measurement parameters
CRH	Adjust capacitance measurement after sensor change
CT	Calibrate temperature measurement
ERRS	Display the currently active errors

Command	Description
FRESTORE	Restore factory settings
HELP	Display the command list
L	View user adjustment parameters
LI	Set user adjustment parameters
PASS	Access advanced service commands. Requires passcode. Use when instructed by Vaisala personnel.
PRES	Set value for pressure compensation
RHCAL	Calibrate humidity measurement
RESET	Reset the transmitter
SEND	Output the reading once
SYSTEM	Show transmitter software information
VERS	Show transmitter firmware version

4.4 Device Information and Status

4.4.1 Show Device Information

The **?** command outputs a listing of device information.

```
?<cr>
```

Example:

```
>?
>Device Name         : DMT132 Dewpoint transmitter
Calibrated          : "20110223"
Calibration location: "VAISALA/HEL"
Serial number       : "G0831004"
Batch number        : "G0000007"
Sensor model        : "HUMICAP180R"
Sensor serial number: "F312"
Operating mode      : 2 Wire
Transmitter status  : NORMAL
```


AKRIBIS · www.akribis.info · contacto@akribis.info

4.4.2 Show Available Measurement Parameters

```
CALCS<cr>
```

Example:

```
>calcs
Tdf Tdf(atm)
>
```

4.4.3 Show Firmware Version

```
VERS<cr>
```

Example:

```
>vers
DMT132 1.0.0 2011-01-24
```

4.4.4 Show Software Information

```
SYSTEM<cr>
```

Example:

```
>system
Device Name         : DMT132 Dewpoint transmitter
Copyright           : Copyright (c) Vaisala Oyj 2011. All rights reserved.
SW Name             : DMT132
SW model            : VAISALA
SW version          : 1.0.0.1214
>
```


AKRIBIS · www.akribis.info · contacto@akribis.info

4.5 Configuring Analog Output

4.5.1 Set Analog Output Measurement Parameter and Scaling

Use the **ASEL** command to show or set the output measurement parameter ("quantity") and the scaling of the analog output.

```
ASEL [quantity] [lowlimit highlimit]<cr>
```

quantity	Quantity that is output on the analog channel: TDF or TFDA.
lowlimit	The low limit of the output scaling in Celsius. Must be lower than high limit.
highlimit	The high limit of the output scaling in Celsius. Must be higher than low limit.

Example (show current settings):

```
>asel
Quantity            : TDF
Level Lo            : -20
Level Hi            : 40
>
```

Example (change output quantity to TDFA):

```
>asel tdfa
Quantity            : TDFA
Saving settings...done
Level Lo            : -20
Level Hi            : 40
>
```

Example (change output to TDF, low limit to -10 and high limit to 30):

```
>asel tdf -10 30
Quantity            : TDF
Saving settings...done
Level Lo            : -10
Saving settings...done
Level Hi            : 30
Saving settings...done
>
```


AKRIBIS · www.akribis.info · contacto@akribis.info

4.5.2 Set Analog Output Error Notification

If the transmitter is malfunctioning, the analog output is set to a pre-defined level of 3.8 mA. This overrides the normal measurement output of the channel. You can change the level, or disable this behavior, using the **AERR** command:

```
AERR [on/off] [level]<cr>
```

on/off Enable (on) or disable (off) the analog output error notification.
level Analog output level, range 3.5 ... 30 mA.

Example (show current settings):

```
>aerr
Notification        : ON
Error level 4-20 mA (mA): 3.800000
>
```

Example (disable analog output error notification):

```
>aerr off
>Notification        : OFF
Saving settings...done
>
```

Example (enable analog output error notification, set level to 21 mA):

```
>aerr on 21
Error level 4-20 mA (mA): 21.000000
Saving settings...done
>
```

The error output value is displayed only when there are minor electrical faults such as a humidity sensor damage. When there is a severe device malfunction, the error output value is not necessarily shown.

4.6 Configuring Measurement Parameters

4.6.1 Set Pressure Value for Dew Point Calculation

The HUMICAP® 180R sensor in the DMT132 is not very pressure-dependent. However, to maximize the measurement accuracy, the pressure of the system must be known. The pressure compensation value has been set at the factory according to the order form. You can view and set a new value using the **PRES** command.

> It is important to set the pressure compensation value accurately when the transmitter is configured to output dew point temperature in atmospheric pressure ($T_{d/f}$ atm). For standard dew point measurement ($T_{d/f}$), it is enough to set an approximate pressure value (±1 bar).

```
PRES [pp.ppppp]<cr>
```

pp.ppppp Absolute pressure (bar_a) in the measuring point. Range 0 ... 20 bar.

Example:

```
>pres 1.01325
>Pressure (bar)      : 1.01325
Saving settings...done
>
```

The pressure conversion coefficients from other pressure units to bars is given in the table below.

Table 7 Pressure Conversion Coefficients

From	To bar_a
PaN/m^2	0.00001
mmHg torr	0.001333224
inHg	0.03386388
mmH_2O	0.00009806650
inH_2O	0.002490889
atm	1.01325
at	0.980665
psi_a	0.06894757

For example:

$$29.9213\ inHg = 29.9213 \times\ 0.03386388 = 1.01325\ \ bar_a$$

Conversions from mmHg and inHg are defined at 0 °C and from mmH_2O and inH_2O at 4 °C.

You can also set the pressure compensation value when you connect the DMT132 to the MI70 indicator. When using the MI70, the pressure unit is bar_a.

4.7 Serial Line Output Commands

4.7.1 Output a Reading Once

Use the **SEND** command to output a single measurement message. The output message is sent for the measurement parameter that is currently selected using the **ASEL** command.

```
SEND<cr>
```

Example:

```
>send
Tdf= -0.80'C
>
```

4.8 Troubleshooting and Maintenance Commands

4.8.1 Display Currently Active Errors

Use the **ERRS** command to display the currently active transmitter error codes. Possible errors and their causes are listed in Table 8 (page 60).

```
ERRS<cr>
```

Example (no errors active):

```
>errs
No errors
>
```

Example (Error E2 active):

```
>errs
Error: E2 Humidity sensor open circuit/not calibrated
>
```

4.8.2 Test Analog Output

The operation of the analog output can be tested with the **ATEST** command by forcing the output to a given value which can then be measured with a calibrated multimeter. After testing the output, give the **ATEST** command again to exit the test mode.

```
ATEST [mA]<cr>
```

mA Analog output value, range 0 ... 30 mA.

The output shows the test value of the analog output as well as diagnostic information that may be useful to Vaisala Service Center if there is a problem with the analog outputs.

Example (enabling analog output test mode with 20 mA output):

```
>atest 20
20.000000, 536b
>
```

Example (disabling analog output test mode, resuming normal output):

```
>atest
>
```

4.8.3 Set LED Indicator Level

Use the **ALARM** command to change the dew point temperature above which the LED indicator plug is lit. The currently measured measurement parameter is used. You can also disable the LED indicator.

AKRIBIS · www.akribis.info · contacto@akribis.info

```
ALARM [on/off] [limit]<cr>
```

on/off Enable (on) or disable (off) the LED indicator function.
limit Dew point temperature above which the LED indicator is lit. Range -20 ... 50 °C.

Example (show the current status of the LED indication):

```
>alarm
Alarm Led           : OFF
Alarm level         : 20.000000
>
```

Example (enable the LED indicator at dew point above 20 °C):

```
>alarm on 20
Alarm level         : 20.000000
Saving settings...done
>
```

4.9 Calibration and Adjustment Commands

Commands that have to do with calibration and adjustment on the serial line are described below. For the calibration and adjustment procedures, see Calibration and Adjustment (page 47).

4.9.1 Calibrate Humidity Measurement

Use the **RHCAL** command to perform a one-point or two-point humidity (RH) calibration.

```
RHCAL<cr>
```

When performing a one-point calibration, you need to place the transmitter in a single humidity reference with RH < 50%. Run the command and enter the exact RH of the reference after the measurement has stabilized. Exit the command by pressing the ESC key before proceeding to the second point (see the first example below). To update the value, press ENTER without inputting a value.

For two-point calibration, the first point requires a RH < 35% humidity reference, the second point must be RH > 50%.

Example (one-point calibration):

```
>rhcal
RH:      11.278554 Ref1 ? 11.3
Press any key when ready
OK
Saving settings...done
>
```

Example (two-point calibration):

```
>rhcal
RH:      11.278554 Ref1 ? 11.3
Press any key when ready
RH:      75.091213 Ref2 ? 75
OK
Saving settings...done
>
```

4.9.2 Calibrate Temperature Measurement

Use the **CT** command to perform a one-point or two-point temperature (T) calibration.

```
CT<cr>
```

When performing a one-point calibration, you need to place the transmitter in a single temperature reference. Run the command and enter the exact temperature of the reference after the measurement has stabilized. Exit the command by pressing the ESC key before proceeding to the second point (see first example below). To update the value, press ENTER without inputting a value.

For two-point calibration, the second reference point must be at least 20 °C warmer than the first. The measurement reading for the second point will appear when this requirement is met.

Example (one-point calibration):

```
>ct
T  22.3104 Ref1 ? 22.3
Press any key when ready
OK
Saving settings...done
>
```

Example (two-point calibration):

```
>ct
T  22.3104 Ref1 ? 22.3
Press any key when ready ...
T  44.9746 Ref2 ? 45
OK
>
```

4.9.3 Adjust Capacitance Measurement

Use the **CRH** command to perform a one-point or two-point correction to the capacitance measurement of the transmitter. This command changes the offset and gain of the measured capacitance, and therefore affects humidity measurement over the entire temperature range.

CAUTION! This command should be used only when the HUMICAP® sensor has been replaced, or the measurement has drifted significantly. For normal adjustment, use the **RHCAL** command instead.

```
CRH<cr>
```

When performing a one-point adjustment, you need to place the transmitter in a single humidity reference with RH < 50%. Run the command and enter the exact RH of the reference after the measurement has stabilized. Exit the command by pressing the ESC key before proceeding to the second point (see the first example below).

For two-point adjustment, the first point requires a RH < 50% humidity reference, the second point must be RH > 50%. There must also be at least 30 percentage points of difference between the references. The measurement reading for the second point will appear when this requirement is met.

Example: one-point adjustment

```
>crh
RH:      11.41200712 Ref1 ? 11.3
Press any key when ready
OK
>
```

Example: two-point adjustment

```
>crh
RH:      11.41200712 Ref1 ? 11.3
Press any key when ready
RH:      74.72910210 Ref2 ? 75
OK
>
```

4.9.4 View User Adjustment Parameters

Use the **L** command to view the current user adjustment parameters that are affected by the **CRH**, **RHCAL**, **CT**, and **LI** commands. This command is useful for checking the currently applied correction.

```
L<cr>
```

The output values are as follows:

- Cp offset and gain: capacitance, adjusted using the **CRH** command.
- RH offset and gain: adjusted using the **RHCAL** command.
- T offset and gain: adjusted using the **CT** command.

Example (shows default values, no user adjustment done):

```
>l
Cp offset           : 0
Cp gain             : 1
RH offset           : 0
RH gain             : 1
T offset            : 0
T gain              : 1
>
```

4.9.5 Set User Adjustment Parameters

Use the **LI** command to set the user adjustment parameters directly. This command is useful for restoring the desired adjustments, and removing the effects of user adjustment without having to perform the factory reset.

```
LI<cr>
```

After entering the command, you will be prompted to enter new values one at a time. Press ENTER without giving a value to move to the next parameter.

Example (shows default values):

```
>li
Cp offset           : 0 ?
Cp gain             : 1 ?
RH offset           : 0 ?
RH gain             : 1 ?
T offset            : 0 ?
T gain              : 1 ?
>
```

4.10 Other Commands

4.10.1 Display Command List

HELP<cr>

Example:

```
>help
?
AERR
ALARM
ASEL
ATEST
CALCS
CRH
CT
ERRS
FRESTORE
HELP
L
LI
PASS
PRES
RHCAL
RESET
SEND
SYSTEM
VERS
>
```

4.10.2 Reset Transmitter

When the **RESET** command is given, the transmitter will restart as if it had just been powered on. All transmitter settings are retained.

```
RESET<cr>
```

Example:

```
>reset
DMT132 1.0.0 2011-02-03
Type "help" for command list
>
```

4.10.3 Restore Factory Settings

Use the **FRESTORE** command to restore the factory settings to the transmitter. All user settings will be lost, and the transmitter will return to the factory calibrated state (user adjustment is cleared).

```
FRESTORE<cr>
```

Example:

```
>frestore
Restoring factory defaults...done
Saving settings...done
>
```

CAUTION! If you have changed the HUMICAP® sensor yourself, be aware that the **FRESTORE** command clears all of the user adjustment parameters, including the capacitance offset and gain that are set by the **CRH** command.
If you want to avoid having to perform the capacitance adjustment procedure again, record the adjustment parameters shown by the **L** command before performing the **FRESTORE** command. You can afterwards restore the adjustment parameters using the **LI** command.
See Set User Adjustment Parameters (page 42).

If the HUMICAP® sensor has been changed at a Vaisala Service Center, the factory calibration has been updated to match the new sensor, and it will not be affected by the **FRESTORE** command.

AKRIBIS · www.akribis.info · contacto@akribis.info

5. Maintenance

5.1 Cleaning Transmitter

The body of the transmitter can be cleaned by wiping with a moistened lint-free cloth. Do not immerse the transmitter in liquid and do not use cleaning agents or solvents.

Do not attempt to clean the filter or the sensor elements. If the filter is contaminated, replace it with a new one.

5.2 Changing Filter

If the filter is contaminated, it should be replaced. New filters can be ordered from Vaisala (order code 230602). Be careful when changing the filter, since it is easy to break the sensors when the filter is removed.

CAUTION! If the transmitter is installed in a pressurized chamber, always make sure that the pressure of the chamber is equalized with the ambient pressure prior to removing the transmitter. When the transmitter is removed for maintenance, cap the hole with a capped nut. This way, the process can be running although the transmitter is not in place. Plugs are available from Vaisala for ISO threaded connections (Vaisala order code 218773) and NPT threaded connections (Vaisala order code 222507).

When replacing the filter, note the following:

- Touching the filter with your fingers will also deposit oil and dirt on the filter, which may affect the measurement. Always handle the filter with gloved hands.
- When installing the transmitter after a filter change, inspect the sealing ring first. Use a new one if the old ring is visibly damaged.

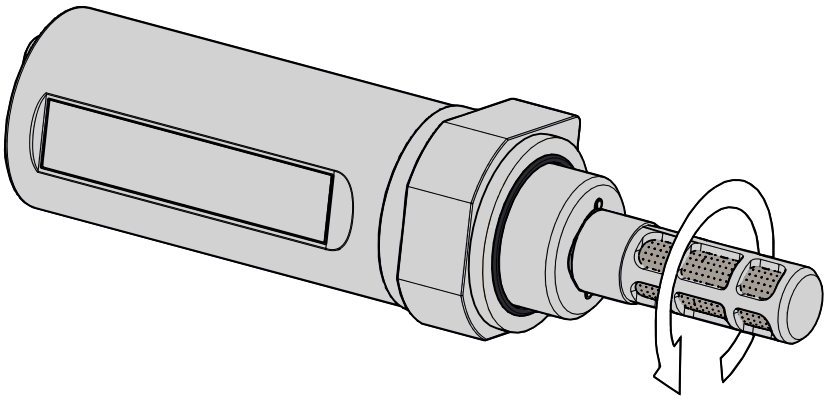

Figure 24 Opening the Filter

AKRIBIS · www.akribis.info · contacto@akribis.info

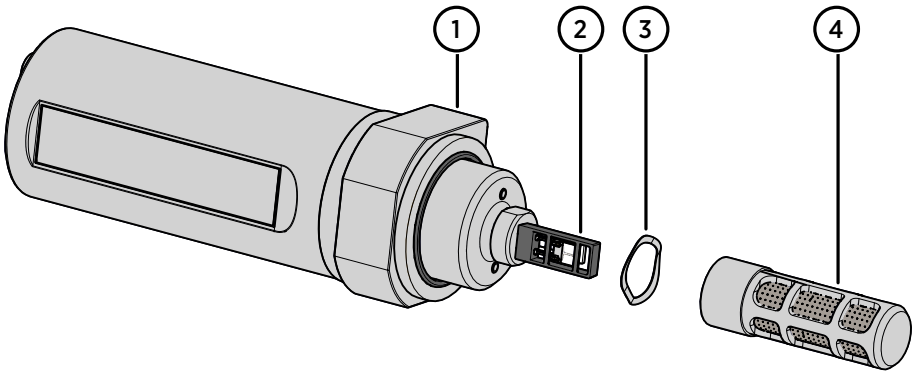

Figure 25 Filter Structure

1 Sealing ring (replace if damaged)
2 Vaisala HUMICAP® 180R sensor and Pt1000 temperature sensor
3 Spring washer
4 Tube filter

Replace the filter as follows:

1. Turn the filter counterclockwise until it is loose.
2. Pull the filter straight out carefully; do not damage the sensors, and do not lose the spring washer.
3. Take the new filter, and insert it to the filter threads. The spring washer should be under the filter. A new washer is not included with the filter, so reuse the old one.
4. Tighten the new filter by turning it clockwise. Do not use tools to tighten the filter, finger tightness is enough.

5.3 Changing Sensor

The user can replace the HUMICAP® 180R sensor with a new one. The new sensor must be of the HUMICAP® 180R type. Do not attempt to use a different sensor type.

Replacing the sensor is repair maintenance, and it is not necessary in normal operation. If the accuracy of the transmitter does not seem to be within specification, it is more likely that the transmitter is in need of calibration and adjustment, and not sensor replacement. See Calibration and Adjustment (page 47).

1. Remove the filter as instructed in Changing Filter (page 45).
2. Remove the damaged sensor and insert a new one. Avoid touching the Pt1000 sensor. Handle the new sensor by the plastic socket. DO NOT TOUCH THE SENSOR PLATE.
3. Attach a new filter on the probe as instructed in Changing Filter (page 45).

AKRIBIS · www.akribis.info · contacto@akribis.info

4. Perform a two-point calibration and adjustment using the **CRH** command as instructed in Capacitance Adjustment (CRH) (page 55).

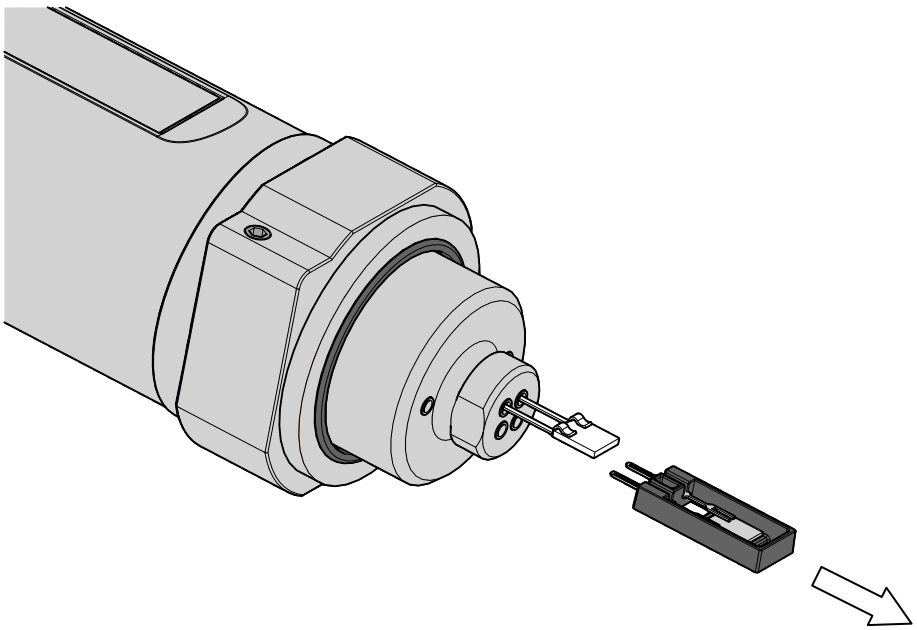

Figure 26 Removing the HUMICAP® 180R Sensor

5.4 Calibration and Adjustment

The DMT132 is fully calibrated as shipped from the factory. The recommended calibration interval is 2 years in refrigerator dryer applications. If the transmitter is used in the dry end of the measurement range, calibration should be done every year. Calibration should also be done if there is a reason to believe that the device is not within the accuracy specifications.

For accurate calibration, disconnect the current loop from connector I for the duration of the calibration. Power the transmitter using the USB service cable (Vaisala order code 219690) instead.

Ensure the pressure compensation setting matches the calibration environment before starting measurements and possible adjustments. For instructions on checking and setting the pressure compensation value, see Set Pressure Value for Dew Point Calculation (page 36).

AKRIBIS · www.akribis.info · contacto@akribis.info

If you have replaced the HUMICAP® 180R sensor, you should adjust the capacitance measurement of the transmitter using the serial command **CRH**. For normal calibration and adjustment, use the **RHCAL** and **CT** commands.
Performing a good calibration takes some time and preparation. Read the *Vaisala Humidity Calibrator HMK15 User's Guide* before performing your first calibration with the HMK15.

You can perform a simple field checking operation by comparing the readings of the DMT132 and the DM70 hand-held dew point meter with a calibrated reference probe.

To have the transmitter calibrated and adjusted by Vaisala, contact a Vaisala Service Center or your local Vaisala representative.

More Information

- Field Check Using DM70 (page 48)
- Technical Support (page 67)

5.4.1 Field Check Using DM70

To check the accuracy of the DMT132 in the field, you need the following equipment:

- A fully charged MI70 indicator (the measurement display that is included in the DM70 and HM70 hand-held indicator products).
- A calibrated reference probe that is suitable for the intended measurement environment and dew point range.
  - DMP74A probe from the DM70 is the recommended choice, as it offers the best accuracy in the measurement range of the DMT132.
  - All probes compatible with the DM70 and HM70 hand-held indicators may be used as a reference.
  - You can also use a second DMT132 transmitter.
- A connection cable between DMT132 and the MI70 indicator (Vaisala order code 219980).
- A reference environment with a stable dew point and temperature in a suitable range for both devices. The normal measurement environment of the transmitter can also be used, if it meets these criteria.

In the procedure below, the readings of the devices are checked individually. You can also perform the field check so that you connect the reference probe simultaneously with the DMT132 you are checking. In this case, you need two of the connection cables if you are using a DMT132 also as the reference probe.

Make sure that the measurements are made in the same pressure.

AKRIBIS · www.akribis.info · contacto@akribis.info

Perform the check as follows:

1. Place the DMT132 in the reference environment (unless it is there already). You can perform the check even if the DMT132 is currently being powered and used, as long as there is no cable or LED indicator plug connected to connector II. However, external powering is not needed when using the MI70 indicator with DMT132.
2. Connect the MI70 connection cable between the MI70 indicator and connector II of the DMT132.
3. Turn on the MI70 indicator.
4. Check and adjust the environment settings if prompted. You can only change the pressure compensation value that is used for dew point temperature calculation.
5. If the desired measurement parameters are not shown on the display, select them from the **Display > Quantities and units** menu.
6. The **Auto power off** function should be disabled on the MI70 indicator to prevent the indicator from powering off in the middle of the check. While waiting for the active measurement to start, check the setting in the **Settings > User interface** menu, and change if necessary.
7. Write down the $T_{d/f}$ reading after the measurement has stabilized.
8. Turn off the MI70 indicator and disconnect the DMT132.
9. Insert the reference probe to the measurement environment, and connect it to the MI70 indicator.
10. Turn on the MI70 indicator. Check and adjust the environment settings if prompted.
11. Wait for the reference probe to provide a stable reading, and compare it with the reading from the DMT132.
    The difference between the readings should be within the combined accuracy of the reference probe and the DMT132 in the measured temperature and dew point. If the difference is more, the DMT132 is in need of adjustment.

You can send the DMT132 to be adjusted at Vaisala, or adjust the transmitter yourself.

Notes on using the MI70 indicator with the DMT132:

- If you disconnect the DMT132 while the MI70 indicator is on, the measurement parameters will remain on the screen, but no measurement will be shown.
- Notification messages from the transmitter will appear in English even if the MI70 has been set to another language.

More Information

- Technical Support (page 67)
- Humidity Calibration and Adjustment (RHCAL) (page 50)

AKRIBIS · www.akribis.info · contacto@akribis.info

5.4.2 Humidity Calibration and Adjustment (RHCAL)

The procedure below describes a humidity measurement calibration and adjustment using serial line commands and the Vaisala Humidity Calibrator HMK15. You can use the procedure to do a one-point calibration (offset) or a two-point calibration (offset and gain).

- To use the HMK15 humidity calibrator with the DMT132, you need the special cover set for HMK15 (Vaisala order code 230914)
- One-point calibration requires a < 50 %RH reference
- Two-point calibration requires additionally a > 50 %RH reference, with over 30 %RH difference between the two points

Even though the transmitter outputs dew point, the humidity calibration procedure is performed using relative humidity (RH) values. You can use the Humidity Calculator to convert between dew point and relative humidity. The Humidity Calculator is available at: www.vaisala.com/humiditycalculator.

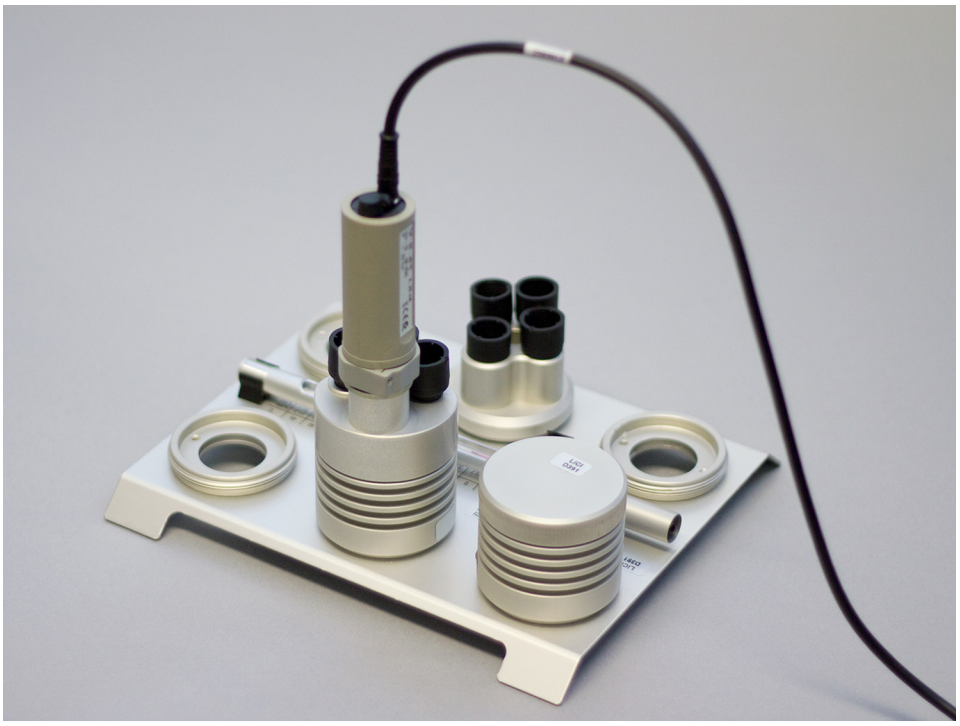

Figure 27 Calibrating DMT132 Using HMK15 and USB Cable

1. Disconnect the cable from connector I of the DMT132 (if connected).
2. Connect the USB cable to connector II on the DMT132, and to a USB port on your PC.
3. Start a terminal application and set the service port connection settings (**19200 8 N 1**). Remember to check which COM port the USB cable is using.

AKRIBIS · www.akribis.info · contacto@akribis.info

4. Verify that the connection works by giving the **?** command:

```
>?
```

   If the transmitter does not respond with device information:
   - Check your serial line settings and cable connections
   - Reconnect the USB cable, restart the terminal application, and try again

5. When your serial connection is working, use the **L** command to see the current user adjustment parameters.
   Write down the RH offset and gain values so you can restore them manually using the **LI** command, if necessary.

```
>l
```

6. Use the **ERRS** command to see that no errors are active:

```
>errs
```

7. Install the HMK15 calibrator fitting over the LiCl salt chamber of the humidity calibrator (11 %RH).
   Make sure it sits tightly over the salt chamber.
8. Insert the DMT132 into the chamber. Do not remove the filter.
   Make sure all unused holes are plugged and the transmitter is installed tightly on the thread.
9. Give the **RHCAL** command.
   The output from the command shows the currently measured RH value, and prompts you to enter the value of the first reference (Ref1). This is the reference on the dry end, which produces the offset correction for the measurement.

```
>rhcal
RH: 10.840536 Ref1 ?
```

10. Wait for 20 ... 40 minutes for the reading to stabilize.
    Press ENTER without typing anything to update the value shown by the **RHCAL** command.

```
RH: 10.890510 Ref1 ?
RH: 10.920197 Ref1 ?
RH: 10.930460 Ref1 ?
```

11. When the measurement shown by **RHCAL** is stable, you can either apply the correction or exit the procedure:
    - To apply the correction, press ENTER one last time to update the value, type 11 and press ENTER again (assuming you are using the HMK15 and the LiCl salt).
    - To exit the **RHCAL** command without adjusting the measurement, press the ESC key and exit this procedure.
12. If you only want to perform a one-point calibration (offset correction), press the ESC key after entering the correction. The **RHCAL** command will exit, and you can move to step 16.

```
RH: 10.950116 Ref1 ? 11
Press any key when ready
>
```

To continue with the calibration of the wet end (gain correction), press ENTER.

13. Insert the DMT132 in the NaCl salt chamber (75 %RH). Make sure the salt chamber is sealed and the transmitter sits tightly.
14. Wait for 20 ... 40 minutes for the reading to stabilize. Press ENTER without typing anything to update the value shown by the **RHCAL** command.

```
RH: 75.251050 Ref2 ?
RH: 75.200621 Ref2 ?
RH: 75.198200 Ref2 ?
```

15. To apply the correction, press ENTER one last time to update the value, type 75 and press ENTER again (assumes you are using the HMK15 and the NaCl salt).

```
RH: 75.175200 Ref2 ? 75
OK
Saving settings...done
>
```

The **RHCAL** command is now finished and both adjustments have been applied.

16. Use the **L** command to verify that the new user adjustment parameters are in use:

```
>l
```

17. Use the **SEND** command to verify that the measurement is OK:

```
>send
Tdf= -9.33'C
>
```

5.4.3 Temperature Calibration and Adjustment (CT)

The following procedure describes a temperature (T) measurement calibration and adjustment using serial line commands. You can use the procedure to do a one-point calibration (offset) or a two-point calibration (offset and gain). For two-point calibration, the second reference point must be at least 20 °C warmer than the first.

1. Disconnect the cable from connector I of the DMT132 (if connected).
2. Connect the USB cable to connector II on the DMT132, and to a USB port on your PC.
3. Start a terminal application and set the service port connection settings (**19200 8 N 1**). Remember to check which COM port the USB cable is using.
4. Verify that the connection works by giving the **?** command:

```
>?
```

   If the transmitter does not respond with device information:
   - Check your serial line settings and cable connections.
   - Reconnect the USB cable, restart the terminal application, and try again.

5. When your serial connection is working, use the **L** command to see the current user adjustment parameters.
   Write down the T offset and gain values so you can restore them manually using the **LI** command, if necessary.

```
>l
```

6. Use the **ERRS** command to see that no errors are active:

```
>errs
```

7. Insert the transmitter in the temperature reference.

8. Give the **CT** command.
   The output from the command shows the currently measured T value, and prompts you to enter the value of the first reference (Ref1). This is the reference on the colder end, which produces the offset correction for the measurement.

```
>ct
T 21.0947 Ref1 ?
```

9. Wait for 20 ... 40 minutes for the reading to stabilize. Press ENTER without typing anything to update the value shown by the **CT** command.

```
T 22.1298 Ref1 ?
T 22.1317 Ref1 ?
T 22.1576 Ref1 ?
```

10. When the measurement shown by **CT** is stable, you can either apply the correction or exit the procedure:
    - To apply the correction, press ENTER one last time to update the value, type the temperature of the reference in degrees Celcius, and press ENTER.
    - To exit the **CT** command without adjusting the measurement, press the ESC key and exit this procedure.
11. If you only want to perform a one-point calibration (offset correction), press the ESC key after entering the correction.
    The **CT** command will exit, and you can move to step 14.

```
>ct
T 22.1601 Ref1 ? 22
Press any key when ready
```

    To continue with the calibration of the warmer end (gain correction), press ENTER.
12. Insert the transmitter in the second temperature reference and wait for 20 ... 40 minutes for the reading to stabilize.
    The measurement reading for the second point will appear when the measured temperature is at least 20 °C warmer than the first reference point.

13. Type the temperature of the second reference point and press ENTER to apply the correction.

```
T 44.9847 Ref2 ? 45
OK
Saving settings...done
>
```

The **CT** command is now finished and both adjustments have been applied.

14. Use the **L** command to verify that the new user adjustment parameters are in use:

```
>l
```

15. Use the **SEND** command to verify that the measurement is OK:

```
>send
Tdf= -1.25'C
>
```

5.4.4 Capacitance Adjustment (CRH)

CAUTION! Adjusting the capacitance measurement affects measurement accuracy across the entire temperature range. This command should be used only when the sensor has been replaced, or the measurement has drifted significantly. After sensor change, you must perform the two-point capacitance adjustment. For normal adjustment, use the **RHCAL** command instead.

CAUTION! Write down the current capacitance adjustment parameters (visible with the **L** command) so that you can restore them manually if necessary. Be aware that if you revert the transmitter to factory settings using the **FRESTORE** command, you will clear all of the user adjustment parameters, including the capacitance offset and gain that are set by the **CRH** command. See Restore Factory Settings (page 44).

The procedure below adjusts the capacitance measurement of the transmitter using the serial line commands and the Vaisala Humidity Calibrator HMK15. You can use the procedure to do a one-point adjustment (offset) or a two-point adjustment (offset and gain).

- One-point adjustment requires a < 50 %RH reference.

- Two-point adjustment requires additionally a > 50 %RH reference, with over 30 %RH difference between the two points.

1. Disconnect the cable from connector I of the DMT132 (if connected).
2. Connect the USB cable to connector II on the DMT132, and to a USB port on your PC.
3. Start a terminal application and set the service port connection settings (**19200 8 N 1**). Remember to check which COM port the USB cable is using.
4. Verify that the connection works by giving the **?** command:

```
>?
```

   If the transmitter does not respond with device information:
   - Check your serial line settings and cable connections
   - Reconnect the USB cable, restart the terminal application, and try again.

5. When your serial connection is working, use the **L** command to see the current user adjustment parameters. Write down the Cp offset and gain values so you can restore them manually using the **LI** command, if necessary.

```
>l
```

6. Use the **ERRS** command to see that no errors are active:

```
>errs
```

7. Install the HMK15 calibrator fitting over the LiCl salt chamber of the humidity calibrator (11 %RH). Make sure it sits tightly over the salt chamber.
8. Insert the DMT132 into the chamber. Do not remove the filter.
   Make sure all unused holes are plugged and the transmitter is installed tightly on the thread.
9. Give the **CRH** command.
   The output from the command shows the currently measured RH value, and prompts you to enter the value of the first reference (Ref1). This is the reference on the dry end, which produces the offset correction for the measurement.

```
>crh
RH: 11.39800112 Ref1 ?
```


AKRIBIS · www.akribis.info · contacto@akribis.info

10. Wait for 20 ... 40 minutes for the reading to stabilize. Press ENTER without typing anything to update the value shown by the **CRH** command.

```
RH: 11.39800112 Ref1 ?
RH: 11.38377201 Ref1 ?
RH: 11.37988329 Ref1 ?
```

11. When the measurement shown by **CRH** is stable, you can either apply the correction or exit the procedure:
    - To apply the correction, press ENTER one last time to update the value, type 11 and press ENTER again (assuming you are using the HMK15 and the LiCl salt).
    - To exit the **CRH** command without adjusting the measurement, press the ESC key and exit this procedure.
12. If you only want to perform a one-point adjustment (offset correction), press the ESC key after entering the correction.
    The **CRH** command will exit, and you can move to step 16.

```
RH: 11.35423321 Ref1 ? 11
Press any key when ready
>
```

    To continue with the adjustment of the wet end (gain correction), press ENTER.
13. Insert the DMT132 in the NaCl salt chamber (75 %RH). Make sure the salt chamber is sealed and the transmitter sits tightly.
14. Wait for 20 ... 40 minutes for the reading to stabilize. Press ENTER without typing anything to update the value shown by the **CRH** command.

```
RH: 74.87782214 Ref2 ?
RH: 74.89157890 Ref2 ?
RH: 74.91556023 Ref2 ?
```

15. To apply the correction, press ENTER one last time to update the value, type 75 and press ENTER again (assumes you are using the HMK15 and the NaCl salt).

```
RH: 74.95221002 Ref2 ? 75
OK
>
```

    The **CRH** command is now finished and both adjustments have been applied.

16. Use the **L** command to verify that the new user adjustment parameters are in use, and write them down for later reference:

```
>l
```

17. Use the **SEND** command to verify that the measurement is OK:

```
>send
Tdf= -9.33'C
>
```


AKRIBIS · www.akribis.info · contacto@akribis.info

6. Troubleshooting

6.1 Typical Problems

If you have a problem with the DMT132, first read the following sections concerning the behavior and error indications of the transmitter:

- Error Codes (page 60)
- Error State (page 59)

Typical causes of errors include the following:

- Incorrect supply voltage
- Incorrect wiring
- Physical damage to the transmitter, especially the sensor elements
- Contamination or condensation on the sensors

Some problems can be solved by simply resetting the transmitter. You can reset the transmitter by disconnecting the power or issuing the **RESET** command using the service port.

If resetting does not help, and if the problem is related to user calibration or transmitter software, you can restore the factory configuration of the transmitter by issuing the **FRESTORE** command.

If you cannot solve the problem and return the transmitter to the normal state, please contact Vaisala technical support.

If repair is needed, you can have the transmitter serviced by a Vaisala Service Center.

More Information

- Technical Support (page 67)

6.2 Error State

If the voltage supplied to the DMT132 is too low for reliable operation, or there is some serious problem that prevents measurement, the DMT132 will enter an error state. The error state is indicated by the following:

- Analog current output is set to the error level (default is 3.8 mA)
- If the LED indicator plug option is installed, the LED is blinking
- Serial line outputs asterisk characters "*" instead of measurement data for the **SEND** command
  For example:

```
>send
Tdf= ***.**'C
>
```


AKRIBIS · www.akribis.info · contacto@akribis.info

- The **ERRS** command returns the currently active error code(s).
  For example:

```
>errs
Error: E2 Humidity sensor open circuit/not calibrated
>
```

The analog output levels for the error state are configurable using the **AERR** command; see Set Analog Output Error Notification (page 35).

6.3 Error Codes

The transmitter has error codes that can be displayed on the serial line using the **ERRS** command. See Display Currently Active Errors (page 37).

Table 8 Error Codes

Error Code	Error Message	Possible Cause(s)
E1	Temperature sensor open circuit/not calibrated	• Temperature sensor damaged • Temperature sensor short circuit • Temperature sensor missing
E2	Humidity sensor open circuit/not calibrated	• Condensation on humidity sensor • Humidity sensor damaged • Humidity sensor short circuit • Humidity sensor missing
E5	Capacitance out of range	• Condensation on humidity sensor • Humidity sensor damaged
E6	Program checksum error	Internal error
E7	Parameter storage checksum error	Internal error
E9	Sensor coefficient checksum error	Internal error
E10	Current settings checksum error	Internal error
E11	Factory settings checksum error	Internal error
E12	Temperature sensor values out of range	• Temperature sensor damaged • Temperature sensor missing
E14	MeasTask not calculating (ATEST)	This error may occur when the analog output is in test mode. See Test Analog Output (page 38).
E16	Default settings not found	Internal error
E17	RH reading too high	Internal error

AKRIBIS · www.akribis.info · contacto@akribis.info

Error Code	Error Message	Possible Cause(s)
E18	RH reading too low	Internal error
E20	Log corrupted	Internal error

AKRIBIS · www.akribis.info · contacto@akribis.info

7. Technical Data

Table 9 Measurement Performance

Property	Description/Value
Dew Point	
Measurement range	-30 ... +50 °C (-22 ... +122 °F) T_d
Accuracy at +20 °C (+68 °F)	±1 °C for -3 ... 20 °C (+26.6 ... +68 °F) T_d[1)] ±2 °C for -15 ... -3 °C (+5 ... +26.6 °F) T_d[1)] See accuracy graph below
Typical Response Time at 20 °C (+68 °F) Gas Temperature and 1 Bar Pressure	
-14 → +3 °C (+7 → +37 °F) T_d	17 s (63 %) 40 s (90 %)
+3 → -14 °C (+37 → +7 °F) T_d	33 s (63 %) 85 s (90 %)
Calculated Variables	
Dew point converted to atmospheric pressure	$T_{d/f}$ atm

1) When dew point is below 0 °C (+32 °F), the transmitter outputs frost point.

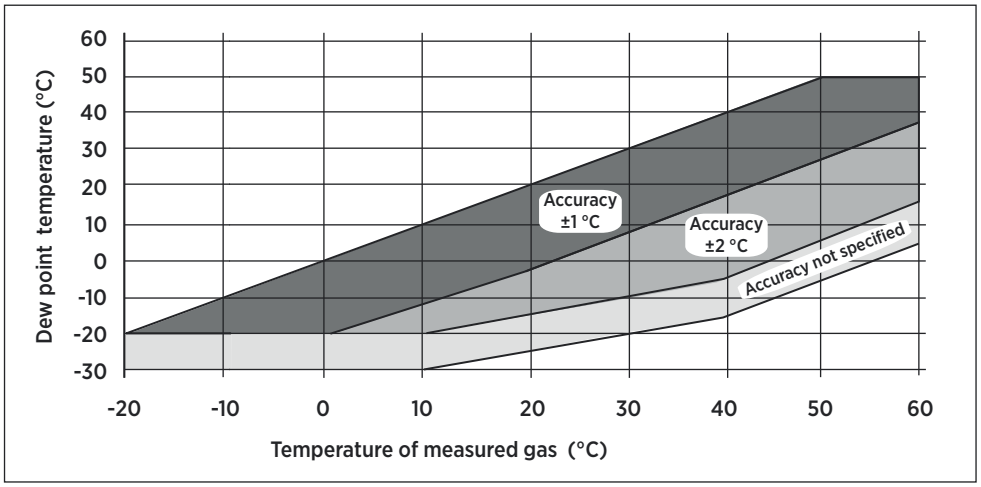

Figure 28 Accuracy Over Temperature Range

Table 10 Operating Environment

Property	Description/Value
Operating temperature	-30 ... +50 °C (-22 ... +122 °F)

Property	Description/Value
Operating pressure	0 ... 20 bar
Relative humidity	0 ... 100 %RH
Sample flow rate	No effect on measurement accuracy
Measured gases	Non-corrosive gases
EMC compliance	EN61326-1, Industrial Environment

Table 11 Outputs

Property	Description/Value
Analog output (scalable)	4 ... 20 mA, 2-wire
Resolution for current output	0.002 mA
Accuracy of analog outputs at +20 °C	±0.05 % full scale
Typical temperature dependence	±0.005 % of full scale/ °C
Connector	4-pin M8 (IEC 60947-5-2)
LED indication available for defined dew point limit/error state indication RS-485 serial line for service use	

Table 12 Mechanical Specifications

Property	Description/Value
Sensor	Vaisala HUMICAP® 180R
Recommended calibration interval (in refrigerant dryer application)	2 years
Mechanical connection	G1/2″ ISO
Operating voltage	10 .... 28 VDC
External load	Max. 100 Ω for supply voltages < 20 VDC Max. 500 Ω for supply voltages 20 ... 28 VDC
Weight	65 g (2.3 oz)
Housing material	PPS + 40 % GF
IP rating	IP65 (NEMA 4)
Storage temperature range	-40 ... +80 °C (-40 ... +176 °F)
Start-up time	3 s

Table 13 Output Cable Specifications

Property	Description/Value
Connector	Straight, molded M8 female (IEC 60947-5-2)

AKRIBIS · www.akribis.info · contacto@akribis.info

Property	Description/Value
Color	Black
Number of contacts	4
Conductors	0.25 mm^2 (× 4) (0.00039 in^2 (× 4))
Insulation	PVC
Cable diameter	5.0 mm (0.2 in)
Protection class	IP67 / NEMA 4
Wire color code	EN50044

7.1 Dimensions

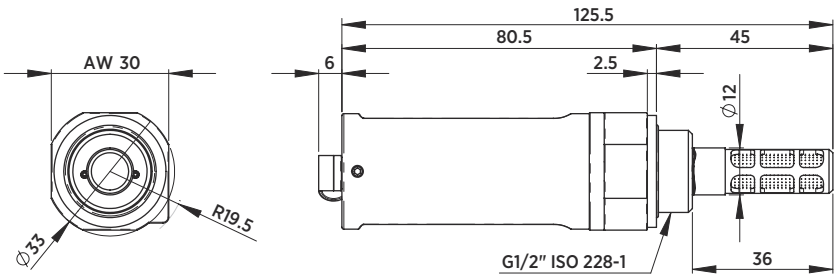

Figure 29 DMT132 Dimensions

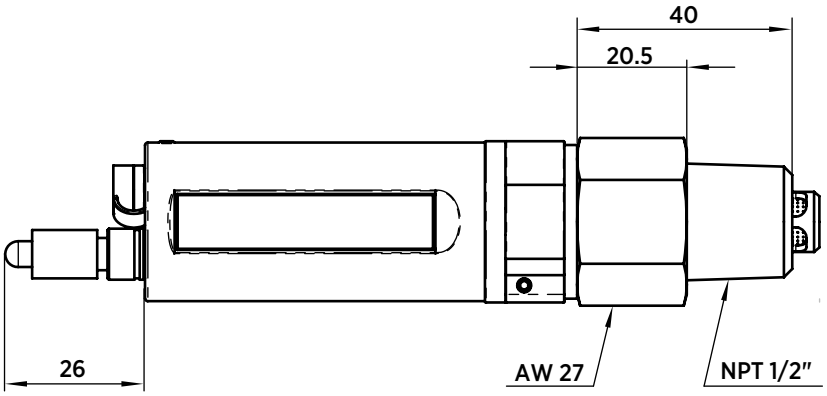

Figure 30 Dimensions with NPT Adapter and LED Plug

7.2 Spare Parts and Accessories

Table 14 Spare Parts and Accessories

Item	Order Code
Tube filter	230602
Special cover set for HMK15 (calibrator fitting DMT132 and HMP60)	230914
NPT Adapter	210662SP
Sample cells	DMT242SC, DMT242SC2, DSC74, DSC74B, DSC74C, DMCOIL
Duct installation flange	DM240FA
Cables (several lengths available)	HMP50Z032, HMP50Z300SP, HMP50Z500SP, HMP50Z1000SP
Loop powered external display	226476
USB service cable	219690
Connection cable to DM70/HM70	219980
LED plug	230388
ISO 1/2″ plug	218773
NPT 1/2″ plug	222507
Sealing ring set (3 pcs U-seal)	221525SP

AKRIBIS · www.akribis.info · contacto@akribis.info

Warranty

For standard warranty terms and conditions, see www.vaisala.com/warranty.

Please observe that any such warranty may not be valid in case of damage due to normal wear and tear, exceptional operating conditions, negligent handling or installation, or unauthorized modifications. Please see the applicable supply contract or Conditions of Sale for details of the warranty for each product.

Technical Support

Contact Vaisala technical support at helpdesk@vaisala.com. Provide at least the following supporting information:

- Product name, model, and serial number
- Name and location of the installation site
- Name and contact information of a technical person who can provide further information on the problem

For more information, see www.vaisala.com/support.

Recycling

Recycle all applicable material.

Follow the statutory regulations for disposing of the product and packaging.

AKRIBIS · www.akribis.info · contacto@akribis.info

AKRIBIS · www.akribis.info · contacto@akribis.info

VAISALA

www.vaisala.com

AKRIBIS · www.akribis.info · contacto@akribis.info