DOCUMENT

Calisto-4953

Isotech

Distributed by AKRIBIS

ISOTECH

The Source for Calibration Professionals

User Maintenance Manual

EUROPA ADVANCED 4520
VENUS ADVANCED 4951
CALISTO ADVANCED 4953

Isothermal Technology Limited, Pine Grove, Southport, Merseyside, PR9 9AG, England
Telephone: +44 (0)1704 543830 Fax: +44 (0)1704 544799 Email: info@isotech.co.uk Website: www.isotech.co.uk

Guarantee

ⓒIsothermal Technology Limited

This instrument has been manufactured to exacting standards and is guaranteed for twelve months against electrical break-down or mechanical failure caused through defective material or workmanship, provided the failure is not the result of misuse.

In the event of failure covered by this guarantee, the instrument must be returned, carriage paid, to the supplier for examination and will be replaced or repaired at our option.

FRAGILE CERAMIC AND/OR GLASS PARTS ARE NOT COVERED BY THIS GUARANTEE INTERFERENCE WITH OR FAILURE TO PROPERLY MAINTAIN THIS INSTRUMENT MAY INVALIDATE THIS GUARANTEE

The company is always willing to give technical advice and assistance where appropriate. Equally, because of the programme of continual development and improvement we reserve the right to amend or alter characteristics and design without prior notice. This publication is for information only.

This handbook contains information that has been reproduced with the kind permission of Eurotherm. Such data is subject to the following notice.

ⓒ2014 Eurotherm Limited

Eurotherm, the Eurotherm logo, Chessell, nanodac, and Itools, are trademarks of Invensys plc, its subsidiaries and affiliates.

All rights are strictly reserved. No part of this document may be reproduced, modified or transmitted in any form by any means, neither may it be stored in a retrieval system other than for the purpose to act as an aid in operating the equipment to which the document relates, without the prior written permission of Invensys Eurotherm Limited.

Eurotherm Limited pursues a policy of continuous development and product improvement. The specifications in this document may therefore be changed without notice. The information in this document is given in good faith, but is intended for guidance only.

Isothermal Technology Limited
Pine Grove, Southport, Merseyside, PR9 9AG, England
Telephone: +44 (0)1704 543830 / Fax: +44 (0)1704 544799
Email: info@isotech.co.uk / Website: www.isotech.co.uk

Contents

1 UNPACKING AND INITIAL INSPECTION 6

2 BEFORE YOU USE THE EQUIPMENT 7

3 SUMMARY OF SYMBOLS 8

4 ELECTRICITY SUPPLY 9

5 ⚠ THE UNIT MUST BE EARTHED 10

6 CE EMC INFORMATION 11

7 ⚠ CAUTIONARY NOTE 12

8 ⚠ SAFETY WARNINGS 13

8.1 ENVIRONMENTAL CONDITIONS 13
8.2 DO NOT MODIFY OR DISASSEMBLE 13
8.3 BEWARE OF ELECTRICAL CONSIDERATIONS 13
8.4 BE CAREFUL WHERE IT IS USED 13
8.5 BE CAREFUL WITH EXTREMES OF TEMPERATURE 13
8.6 BE CAREFUL WITH INSERTS 13
8.7 BE CAREFUL WITH FLUIDS 14

9 CONSIDER THE ENVIRONMENT 15

10 INTRODUCTION 16

10.1 COMPARISON CALIBRATION 16
10.2 BASIC OPERATION 16
10.3 SITE OR SELF-CONTAINED CALIBRATORS 16
10.4 EXTERNAL STANDARDS + BASIC 17
10.5 ADVANCED CALIBRATORS 17

11 MODE OF OPERATION 18

11.1 METAL BLOCK BATH 18
11.2 STIRRED LIQUID BATH 18
11.3 BLACKBODY SOURCE 19
11.4 SURFACE SENSOR CALIBRATION 19
11.5 ITS-90 FIXED POINT CALIBRATION 19

12 HOW TO MEASURE THE TRUE TEMPERATURE INSIDE THE ACCESSORIES SUPPLIED WITH THE ISOCAL-6 20

12.1 THE CONTROLLER 20
12.2 THE REFERENCE THERMOMETER 20
12.3 THE INDUSTRIAL THERMOMETER 20

13 OPERATION OF THE ADVANCED DRY BLOCK TEMPERATURE CALIBRATOR 21

13.1 A TOUR OF THE EQUIPMENT 21
13.2 THE USER INTERFACE START UP SCREEN AND CONTROLS 22
13.3 THE ISOTECH HOMEPAGE 22
13.4 THE THERMOSTAT TESTING PAGE 23
13.5 THE PROGRAM PAGE (NO ACTIVE PROGRAM) 23
13.6 THE PROGRAM PAGE (ACTIVE PROGRAM RUNNING) 23
13.7 THE USER ACCESS PAGE 24

14 GETTING STARTED 25
14.1 CHANGING THE SET POINT 25
15 USING THE ADVANCED FEATURES OF THIS EQUIPMENT 26
15.1 TO SET FROM THE FRONT PANEL 26
15.1.1 Operator Access 26
15.1.2 Supervisor Access (in addition to the above functions) 26
15.1.3 Engineer Access 26
15.2 HOW TO LOG IN AS THE SUPERVISOR 27
15.3 HOW TO LOG IN AS THE ENGINEER 27
15.4 HOW TO CHANGE INPUT SENSOR ON CHANNELS 1, 2 AND 3 28
15.5 HOW TO GLOBALLY CHANGE FROM °C TO °F OR KELVIN *(FIRMWARE VERSION A5.40 BEFORE NOVEMBER 2016)* 29
15.6 HOW TO GLOBALLY CHANGE FROM °C TO °F OR KELVIN *(FIRMWARE VERSION A5.43 AFTER NOVEMBER 2016)* 29
15.7 THERMOSTAT TESTING USING THE ADVANCED UNIT 29
15.8 ENABLING THE AUTOTUNE FEATURE 30
15.9 USING THE SETPOINT TRIM FEATURE FOR OFFSET ELIMINATION 30
15.10 HOW TO CHANGE THE DATE AND TIME OR THE LANGUAGE OF THE ADVANCED EQUIPMENT 31
15.11 THERMOMETER INPUT CHANNELS 31
15.12 PROCESS TO APPLY A USER CALIBRATION TO THE CONTROLLER USING A PRT CONNECTED TO CHANNEL 1 32
15.13 THE NETWORK INTERFACE 33
15.14 TO ACCESS THE NETWORK INTERFACE 33
15.15 THE WEB BROWSER 33
15.16 DATA LOGGING 34
15.17 FTP SERVER ARCHIVING 35
15.18 PROGRAMMER FUNCTION 35
15.19 PROGRAM DETAILS 36
15.19.1 Operation 36
15.19.2 Status 36
15.19.3 Program 36
15.19.4 Holdback Style 36
15.19.5 Program 36
15.19.6 Ch1 Holdback 37
15.19.7 Ch1 Holdback value 37
15.19.8 Ch2 Holdback 37
15.19.9 Ch2 Holdback value 37
15.19.10 Ramp Style 37
15.19.11 Time 37
15.19.12 Ch1 Ramp Units 37
15.19.13 Ch2 Ramp Units 37
15.20 HOW TO CREATE A SIMPLE PROGRAM USING THE CONTROLLER INTERFACE 38
15.21 TO ENABLE/RUN THIS PROGRAM 39
15.22 TO EDIT AN EXISTING PROGRAM 39
15.23 USING THE HOLDBACK FEATURE 39
16 CONNECTING TEMPERATURE SENSORS 41
16.1 PLATINUM RESISTANCE THERMOMETERS, PRTS 41
16.2 INPUT CONNECTIONS 41
16.3 CONNECTING THERMOCOUPLES 41
16.4 CONNECTING 4 – 20MA CURRENT TRANSMITTERS 42
16.4.1 Using the Current Loop Interface (935-06-161) 42
16.4.2 Altering Channel 1 setting to read in mA 42
16.4.3 Altering Channel 1 setting to read in °C 43
17 SPECIFICATION 44
300 Watts 44

115Vac or 230 44
14kg 44

18 CONNECTING TO A PC **45**

18.1 ISOTECH CONFIG UTILITY 45
18.2 ISOTECH I-CAL EASY 46
18.3 PROGRAM EDITOR 46
18.4 REVIEW 47

19 ACCESSORIES **48**

1 Unpacking And Initial Inspection

Our Packing Department uses custom designed packaging to send out your unit, but as accidents can still happen in transit, you are advised, after unpacking the unit, to inspect it for any sign of shipping damage and confirm that your delivery is in accordance with the packing check list. If you find any damage or that part of the delivery is missing notify us or our agent and the carrier immediately. If the unit is damaged you should keep the packing for possible insurance assessment.

2 Before You Use The Equipment

Please read the handbook and familiarise yourself with all warnings, hazards and safety information. Regularly inspect the equipment, accessories and electrical leads. Do not use if there is any sign of damage. Keep the equipment clean, only use a damp cloth. Do not use solvents or allows liquids to enter the case.

3 Summary of Symbols

	ISO3864 – Caution, read the entire manual before use
	IEC 417 – Caution, hot surface (risk of burn)
O	Off
I	On
	Waste Electrical and Electronic Equipment (WEEE directive) symbol
	Complies with European regulations (CE mark)
	USB symbol
	Ethernet RJ45 symbol
	Risk of Electrical Shock

4 Electricity Supply

Before connecting to the electricity supply please familiarise yourself with the parts of the manual relevant to your model.

Your unit's supply voltage requirement is specified on a label on the instrument along with the serial number. Only connect to a power supply matching the requirement stated on the equipment.

5 ⚠ The Unit Must Be Earthed

This equipment is a Class 1 Appliance and must be earthed (grounded). Use the supplied power cord and plug it directly into an AC outlet with a protective earth.

If using an alternative cord ensure it is of adequate rating.

If fitting a plug to the cable we have supplied the cable is colour coded as follows:

Colour	Function
Green/yellow	Earth (Ground)
Brown	Live (line)
Blue	Neutral

Do not use the equipment if it is not correctly earthed. If in doubt consult Isothermal Technology Ltd or a qualified electrician.

6 CE EMC Information

This product meets the requirements of the European Directive on Electromagnetic Compatibility (EMC) 89/336/EEC as amended by EC Directive 92/31/EEC and the European Low Voltage Directive 73/25/EEC, amended by 93/68/EEC. To ensure emission compliance please ensure that connecting leads are fully screened.

The product meets the susceptibility requirements of EN 50082-1, criterion B.

7 ⚠ Cautionary Note

Operators of this equipment should be adequately trained in the handling of hot and cold items. It is important the user has been trained about the selection and use of liquids over a wide temperature range. It is expected that personnel using this equipment will be competent with the management of apparatus which may be powered or under extremes of temperature and are able to appreciate the hazards which may be associated with and the precautions to be taken with, such equipment.

8 ⚠ Safety Warnings

8.1 Environmental Conditions

- Operating temperature: 5-40°C (41-122°F)
- Relative Humidity: 5-80% - Non-condensing

8.2 Do Not Modify Or Disassemble

- Do not use the apparatus for jobs other than those for which it was designed, i.e. the calibration of thermometers
- There are no user serviceable parts inside. Do not dismantle or modify the apparatus. For repair information contact Isothermal Technology Ltd
- For equipment with fans, the fan should kept free from dust build up; a soft brush or vacuum cleaner may be used on the external grill

8.3 Beware Of Electrical Considerations

- The equipment is for installation category II (transient voltages) and pollution degree II in accordance with IEC 664 at altitudes to 2000 metres
- Sensor Input Connection must never exceed 30V with reference to ground
- Thermostat test inputs should be voltage free: isolate from any voltage source during test

8.4 Be Careful Where It Is Used

- The equipment is not for use in hazardous areas or in an environment close to flammable materials or gases
- The equipment must be used on a flat level surface, with adequate space around it for air flow and avoid blocking ventilation slots
- Ensure free space above the unit to avoid risk of burn or fire
- The equipment should only be used indoors
- Site in a way that allows access to the power switch, and to allow the cable to be disconnected
- Avoid excessive heat, humidity, dust and vibration ensuring it will not be subjected to dripping or splashing liquids

8.5 Be Careful With Extremes Of Temperature

- In normal use the calibration volume, inserts and probes will become very hot and present a burn hazard
- Do not remove inserts, probes or handle the equipment when it is hot or cold.
- Allow the equipment and accessories to reach a temperature between ambient and 70°C before switching off or storing the equipment in its case
- Do not use the equipment outside its recommended temperature range
- Operating the equipment at extremes of temperature for extended periods may call for early replacement of the heating assembly
- Wear appropriate protective clothing

8.6 Be Careful With Inserts

- Only use inserts supplied with, or ordered specifically for, this model
- Do not handle inserts while they are very hot or cold
- Inserts for low temperature models may melt and cause a fire if used in high temperature models
- Only use Isotech inserts which are specially treated to avoid them from becoming stuck in the calibration volume
- Do not use powders, liquids or compounds in the insert; this may lead to the insert or probes becoming stuck

8.7 Be Careful With Fluids

- Isocal-6 models can be used as liquid baths; the Hyperion and Drago models can have the liquid directly in the block or the liquid container. For all other models do not add liquid directly to the block; you must place the liquid in the appropriate Isotech liquid container kit.
- To avoid risk of toxic fumes or ignition only use the appropriate fluid and be careful not to exceed the stated temperature range
- Do not handle hot fluids
- Wear appropriate eye protection and be careful to avoid spills, overspills or splashing
- Do not overfill - liquids will expand on heating, allow room for expansion
- Be careful to select an appropriate liquid – viscous liquids will offer poor thermal performance.
- Never mix fluids and keep containers clean and dry before introducing a new fluid
- Do not use oils below the dew point. Water introduced into oil can present a hazard at higher temperatures due to steam generation
- Ensure adequate ventilation of any liquid fumes

9 Consider The Environment

The equipment should be recycled or disposed of in a proper way; following the Waste Electrical and Electronic Equipment (WEEE) directive

10 Introduction

The Isocal-6 range of products allows unprecedented flexibility for the calibration of temperature sensors. The Isocal-6 range may be used with the following options:

1. As a Metal Block Bath
2. As a Stirred Liquid Bath (not Calisto)
3. A Blackbody Source
4. A Surface Sensor Calibrator
5. An ITS-90 Fixed Point Apparatus

10.1 Comparison Calibration

By definition, one compares industrial thermometers to a calibrated standard. There are three methods commonly used.

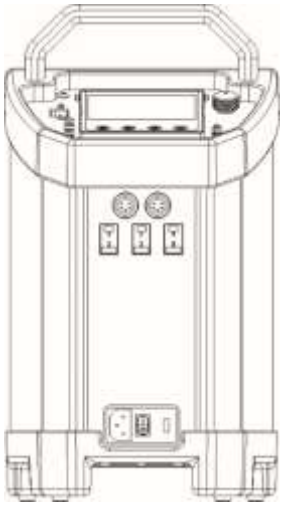

10.2 Basic Operation

Using the controller as the "calibrated standard". This method means that the complete bath is calibrated by comparing the controller reading to a calibrated standard placed in the bath.

This is a common method but is unsafe since the control sensor is

a) inaccessible
b) in the wrong place to give correct temperature of the insert

For these reasons it fails to satisfy ISO9000 and gives large uncertainties.

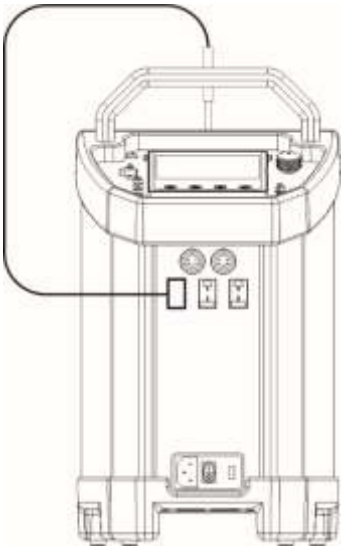

10.3 Site or Self-Contained Calibrators

In these an indicator and external calibrated sensor are used to measure the temperature of the insert. This arrangement gives good results and traceability. To recalibrate however it does mean sending the whole calibrator back to the calibration laboratory. The calibrator is self-contained, self-sufficient and meets ISO9000 requirements.

10.4 External Standards + Basic

Here a separate indicator and calibrated sensor are used to measure the inserts temperature. With a suitable indicator such as the Isotech milliK this gives the most accurate and reliable results, depending on the indicator.

It means that the calibrator does not need calibrating; only the indicator and its calibrated sensor need re-calibration. One indicator may be used with a range of blocks. This method also meets ISO9000 requirements.

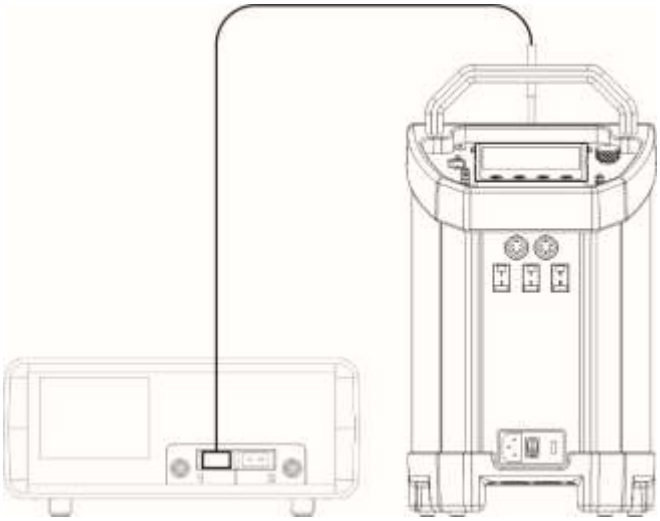

10.5 ADVANCED Calibrators

The ADVANCED model includes an indicator with channels for both the test thermometers and an external calibrated sensor used to measure the temperature of the insert. This allows best practice calibration with established traceability and uncertainty. To recalibrate however it does mean sending the whole calibrator back to the calibration laboratory. The calibrator is self-contained for reference and test probes, self-sufficient and meets ISO9000 requirements.

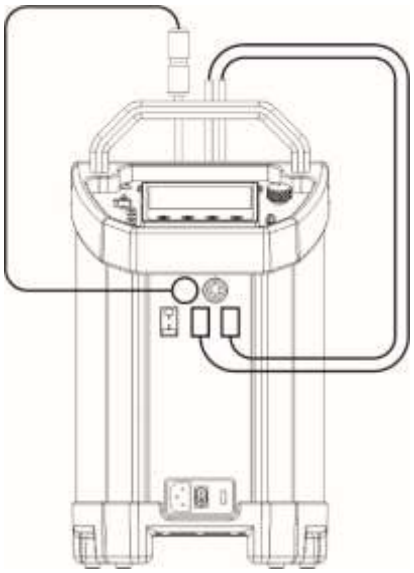

11 Mode Of Operation

11.1 Metal Block Bath

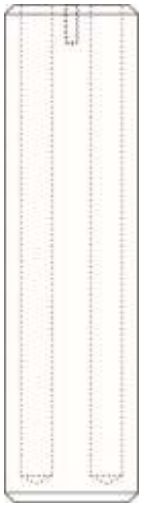

The metal block bath function of the Isocal-6 is well suited for fast, convenient, mess free calibration of temperature sensors.

The Isocal-6 metal insert is placed into the calibration well. The stir speed control should be set to the OFF position (turn fully anti-clockwise).

The thermometers under test are placed into suitable holes in metal. For the ADVANCED and Site models a calibrated reference probe should be placed into the insert and the actual temperature can be read from the unit's display. For the Basic models an external temperature indicator should be used.

For traceable calibration the actual value of the insert temperature should be recorded along with the values from the sensors under test.

11.2 Stirred Liquid Bath

The stirred liquid bath function of the Isocal-6 is well suited for odd shaped sensors which will not easily be accommodated in a metal insert.

The Isocal-6 Liquid Container (part number 951-06-01) is placed into the calibration well and the container is filled with a suitable liquid, see accessory page, to suit the temperature range that the bath is to be used over. The container should be filled to 25mm from the top of the container. Care must be taken to adjust the level as the liquid contracts or expands with temperature changes. The stirrer speed control is set ON and to the mid position. If necessary the speed to can be adjusted to give the optimum value for a particular application, this position should be found experimentally and then noted for future use.

The thermometers under test are placed into the liquid. Accessories are available to support the thermometers.

a) The Thermometer Support Kit (part number 951-06-03) allows thermometers with a diameter of 2 to 6.5mm to be suspended in the liquid.

b) The Sensor Guide which fits into the tank and can support a number of thermometers (part number 951-02-24).

It is important that one of the accessories is used to prevent the probes from reaching the bottom of the tank which would stop the stirring action. For the ADVANCED and Site models a calibrated reference probe should be placed into the liquid and the actual temperature can be read from the unit's display. For the Basic models an external temperature indicator should be used. For traceable calibration the actual value of the liquid temperature should be recorded along with the values from the sensors under test.

For traceable calibration the actual value of the liquid temperature should be recorded along with the values from the sensors under test.

11.3 Blackbody Source

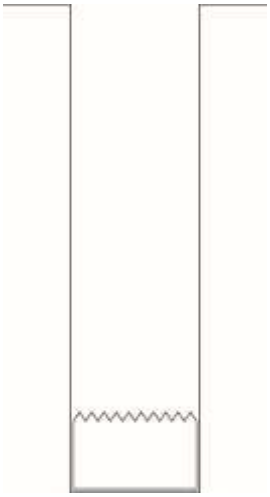

The blackbody function of the Isocal-6 is well suited for fast, convenient, mess free calibration of infra-red temperature sensors.

The Isocal-6 blackbody target (part number 951-06-04), see accessory page, and is placed into the calibration well. The stir speed control should be set to the OFF position.

The units under test should be aligned with the target.

For the Site models a calibrated reference probe should be placed into the hole in the block and the actual temperature can be read from the temperature indicator to which the infrared thermometer(s) are compared. For the Basic models an external temperature indicator should be used.

11.4 Surface Sensor Calibration

The surface sensor function of the Isocal-6 is well suited for fast, convenient, mess free calibration of most surface temperature sensors.

The Isocal-6 surface sensor insert (part number 951-02-19), is placed into the calibration well. The stir speed control should be set to the OFF position.

A calibrated probe (part number 935-14-83) is placed in the pocket of the surface sensor insert and connected to the temperature indicator of the Site models. For the Basic models an external indicator should be used. Surface sensors are placed on top of the insert and when stable compared to the calibrated probe.

11.5 ITS-90 Fixed Point Calibration

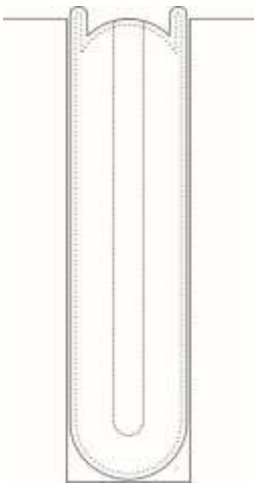

The ITS-90 fixed point function of the Isocal-6 is well suited for fast, convenient, mess free calibration of thermometers to uncertainties as low at 0.001°C.

The special cell is placed into the Isocal-6 calibration well. The stir speed control should be set to the OFF position. For detailed operating information, refer to the separate manual provided with the cell.

12 How To Measure The True Temperature Inside The Accessories Supplied With The Isocal-6

The controller of the Isocal-6 controls and reads the temperature of the block surrounding the 35mmØ by 160mm deep calibration well.

There are various accessories including the surface calibration insert, the oil container, blackbody etc. These adapt the Isocal-6 to perform varied calibration functions.

None of these accessories actually get to the block temperature (and hence the controller's temperature) because each accessory has a different immersion characteristic. For this reason the Isocal-6, like all comparison baths, requires a reference thermometer to indicate the true temperature inside the accessory.

Remember the following:-

12.1 The Controller

The controller is used to set a constant temperature and create an isothermal environment for the comparison calibration of temperature sensors.

12.2 The Reference Thermometer

The reference thermometer is placed in the accessory or insert and measures the true temperature inside the insert or accessory.

12.3 The Industrial Thermometer

The industrial thermometer is placed in the accessory or insert and is compared to the true temperature as indicated by the reference thermometer. An insert will typically have a 1% immersion error. For more details see - Depths of Immersion. Tavener J. P – available at http://www.isotech.co.uk

13 Operation Of The ADVANCED Dry Block Temperature Calibrator

13.1 A Tour Of The Equipment

Figure 1: Main Input and Output for the ADVANCED equipment

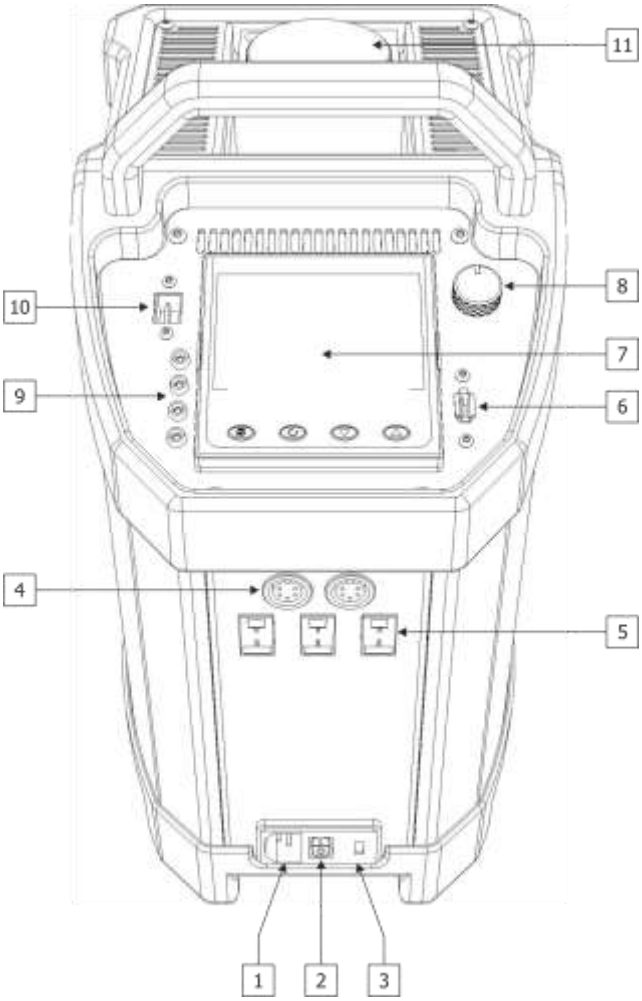

1. **Main supply voltage connection socket**
   This socket allow the Mains Voltage to be applied to power up the equipment. Use only the supplied lead or a suitably specified IEC alternative. Confirm the supply voltage using the ratings label on the rear of the equipment.

2. **Power On/Off switch**
   Once the Power lead is connected, this switch will power up and down the equipment

3. **Fuse carrier and window showing fuse rating**
   With the mains cable disconnected, the fuse carrier can be removed for the inspection or replacement of the fuse. The fuse rating is displayed through the window.

4. **Channels 1 and 2 PRT input sockets**
   These allow for the connection of external Platinum resistance thermometers. Warning – Do not connect any other form of input to these sockets.

5. **Channels 1,2 and 3 Thermocouple input sockets**
   These allow for the connection of a range of Thermocouples to be connected. Warning – Do not connect any other form of input to these sockets.

6. **USB socket**
   This allows for the connection of a USB memory stick or the connection of a USB keyboard. *Please see relevant note at the end of this section.*

7. **Full colour graphical user interface display**
   ¼ VGA crystal clear, IP66 wash-down display

8. **Magnetic stirrer speed adjuster**
   Manual adjustment of the Magnetic stirring speed.

9. **Thermostatic testing input sockets channels 1 and 2**
   Allows for two thermostats to be connected simultaneously to verify opening or closing temperatures.

10. **Ethernet (RJ45) socket**
This allows for the connection of the equipment to either a PC for direct connection or to a network to allow network access.

11. **Dry block/Liquid bath volume**
This is actual heat source of the ADVANCED unit. This may be either a Liquid bath or Dry Block

Note: Precautions against electrostatic discharge should be taken when the instrument terminals are being accessed. The USB and Ethernet connections are particularly vulnerable.

When using a USB extension cable, a high quality screened cable must be used. The total length of USB cable between the device and the USB port must not exceed 3 metres (10 ft.)

13.2 The USER INTERFACE Start Up Screen And Controls

Figure 2

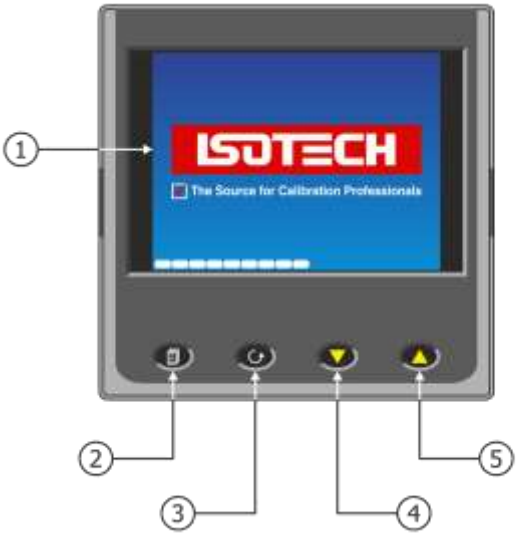

1. **ISOTECH** splashscreen
2. **PAGE** button
3. **SCROLL** button
4. **DOWN** button
5. **UP** button

13.3 The ISOTECH Homepage

Figure 3

1. Channel 1 display value
2. Channel 2 display value
3. RECORD icon
4. Product identifier
5. Block temperature (Process Variable)
6. Set temperature (Working Set Point)
7. Channel 3 display value
8. Setpoint adjust

13.4 The THERMOSTAT TESTING Page

Figure 4

1. THERMOSTAT 1 freeze temperature
2. THERMOSTAT 1 freeze temperature
3. SENSE value 1 (Normally Open/Closed)
4. SENSE value 2 (Normally Open/Closed)
5. REFERENCE channel temperature display

13.5 The PROGRAM Page (No Active Program)

Figure 5

1. Current program NAME/STATUS
2. MODE display
3. Program Edit beacon
4. Block temperature (Process Variable)
5. Program Setpoint
6. Program STATUS

13.6 The PROGRAM Page (Active Program Running)

Figure 6

1. Program status (running)
2. Segment type
3. Program progress
4. Segment time remaining
5. Program time remaining
6. Segment progress

13.7 The USER ACCESS Page

Figure 7

1. Channel 1 input type – read only
2. Channel 2 input type – read only
3. Channel 3 input type – read only
4. Channel 1 minus Channel 2 – read only
5. Channel 1 minus Channel 3 – read only
6. IP Type (fixed or dynamic (DHCP)) – read only
7. Setpoint Trim enable/disable – writeable
8. Autotune - writeable

14 Getting Started

To operate this equipment, place on a suitable surface and visually inspect for any damage, since either last use, or from transit. Assuming all is well, place the supplied insert or liquid container in the well at the rear of the equipment.

Using the supplied mains lead, insert into the **Main supply voltage connection socket** (figure 1, item 1). Ensure the voltage supply and rating of the equipment comply and plug the lead into the supply.

Press the **Power On/Off switch** (figure 1, item 2) to power up the equipment. The display will now illuminate and display the ISOTECH splashscreen (figure 2). The white progress bar at the bottom of the screen will scroll across the screen showing progress. Normally in the region of 45 seconds.

When the screen has booted up, the home page will be as figure 3. The equipment will now heat or cool to the last set point indicated as figure 3, item 7.

To assist in getting started there are some tutorial videos online at http://www.isotech.co.uk/advanced

14.1 Changing The Set Point

To change the setpoint of the equipment on the ADVANCED unit:

1. From the ISOTECH homepage, press the SCROLL button once, this will highlight the SETPOINT ADJUST box.
2. Press the SCROLL button once more and this will allow adjustment of the setpoint via the UP/DOWN buttons.
3. Scroll to the desired set point as described above.
4. When the temperature is set, press the SCROLL button again to enter and save the setting.
5. The equipment will now raise or lower the block temperature as required.

15 Using The ADVANCED Features Of This Equipment

The User interface allows for the alteration of certain aspects of the control and indication system. Examples would be the ability to change the sensor type on any of the Input channels or to change the resolution of the Channel temperature. This configuration can be set from a PC using the Isotech Config Utility – see "Connecting to a PC" or from the front panel.

15.1 To Set From The Front Panel

To do this, the user will need to log in to different levels of access using the controller menu system.

There are three levels of access:

1. Operator Access
2. Supervisor Access
3. Engineer Access

Typical levels of adjustment are outlined below for each level.

15.1.1 Operator Access

- Scroll the home pages to allow readable access to controller function
- Change the set point of the bath
- Change the Sense status of the Freeze display
- Enable the Autotune
- Enable the set point trim function

15.1.2 Supervisor Access (in addition to the above functions)

- Program selection for the program function
- Thermometer calibration data entry for Channels 1, 2 and 3

15.1.3 Engineer Access

- Change sensor type for channels 1, 2 and 3
- Change resolution for channels 1, 2 and 3
- Change language selection
- Change °C to °F or K

15.2 How To Log In As The SUPERVISOR

Figure 8

Figure 9

1. Press the Page button to display the Home menu (figure 8)
2. Scroll to LOG IN
3. Press the SCROLL button
4. Press up to scroll to SUPERVISOR in dialogue box
5. Press the SCROLL button to prompt for a passcode
6. Select code **15** from the soft keyboard
7. Press PAGE button to prompt to accept the changes
8. Select Yes and enter with SCROLL button to display the SUPERVISOR screen (figure 9)
9. When logged in as the SUPERVISOR the equipment will control in the normal way

15.3 How To Log In As The ENGINEER

Figure 10

Figure 11

1. Press the Page button to display the Home menu (figure 10)
2. Scroll to LOG IN
3. Press the SCROLL button
4. Press up to scroll to ENGINEER in dialogue box
5. Press the SCROLL button to prompt for a passcode
6. Select code 17 from the soft keyboard
7. Press PAGE button to prompt to accept the changes
8. Select Yes and enter with SCROLL button to display the ENGINEER screen (figure 11)
9. When logged in as the ENGINEER, the equipment will **not** control the temperature of the heat source

15.4 How To Change Input Sensor On Channels 1, 2 And 3

Input sensors can be user defined using the menu system to change to PT100, a range of thermocouple types, Ohms or Voltage. To change sensor type follow the procedure below:

1. Log in as the ENGINEER
2. Scroll to CHANNEL
3. Select the desired channel for alteration
4. Press the SCROLL button to enter
5. Scroll to MAIN
6. The MAIN Sub Menu will now be displayed

To configure for a PT100:

1. Scroll to TYPE and press SCROLL to enter
2. Press UP to scroll to RTD, press the SCROLL button to enter
3. Scroll to RESOLUTION and press SCROLL to enter
4. Press up to select the Resolution required, press SCROLL to enter
5. Scroll to LIN TYPE and press SCROLL to enter
6. Select PT100 from the list and press SCROLL to enter
7. Ensure RANGE HIGH is set to 800
8. Press the PAGE button until the ENGINEER screen is displayed, scroll to LOG OUT and enter with the SCROLL button

To configure for a Thermocouple:

1. Scroll to TYPE and press SCROLL to enter
2. Press UP to scroll to THERMOCOUPLE, press the SCROLL button to enter
3. Scroll to RESOLUTION and press SCROLL to enter
4. Press up to select the Resolution required, press SCROLL to enter
5. Scroll to LIN TYPE and press SCROLL to enter
6. Select required thermocouple type from the list and press SCROLL to enter
7. Ensure RANGE HIGH is set to 1200
8. Press the PAGE button until the ENGINEER screen is displayed, scroll to LOG OUT and enter with the SCROLL button

Important Note: The COLD JUNCTION on Channels 1, 2 and 3 should ALWAYS be set to CJTypeRemCh3. This value should not ever be changed. Doing so will disable the cold junction compensation for Channels 1, 2 and 3.

Channel 3 input type should ALWAYS be set to TC+RTD, the thermocouple type can selected from lower done in the menu.

15.5 How to globally change from °C to °F or Kelvin *(firmware version A5.40 before November 2016)*

1. Log in as the ENGINEER above
2. Select the Channel required for adjustment
3. Select Main from the channel options
4. Scroll down to RANGE UNITS
5. Enter using SCROLL button and select required units
6. Enter value using SCROLL button
7. Press the PAGE button until the ENGINEER screen is displayed, scroll to LOG OUT and enter with the SCROLL button

Note: Channel 4 is reserved for the control sensor and as such is disabled from user access.

15.6 How to globally change from °C to °F or Kelvin *(firmware version A5.43 after November 2016)*

1. Log in as the ENGINEER
2. Scroll to INSTRUMENT
3. Scroll to DISPLAY
4. Scroll to UNITS
5. Select by pressing the SCROLL button
6. Use up/down to select from °C, °F or Kelvin
7. Press the PAGE button to exit and save the selection

Note: Channel 4 is reserved for the control sensor and as such is disabled from user access.

15.7 Thermostat testing using the ADVANCED unit

The ADVANCED equipment has the facility to test thermostats or thermal switches using the page featured in figure 4. Up to two thermostats can be tested at the same time.

The system uses Channel 1 as a reference channel to record the temperature of the thermostat opening or closing. To use this feature, there must be a thermometer connected to Channel 1.

The sense of the thermostat can be changed by the user and each thermostat is referred to as "FREEZE 1" and "FREEZE 2". The options are Normally open (N/O) or Normally closed (N/C).

The thermostat is connected via the 2mm input sockets on the controller plate (item 9, figure 1).

You are not required to log in to access this feature.

How to change the SENSE value on the FREEZE display:

1. Scroll to the FREEZE display page
2. Highlight SENSE 1 by pressing the SCROLL button
3. Press the SCROLL button again to access the value and adjust using the up/down buttons
4. Enter the value by pressing the SCROLL button again
5. To adjust SENSE 2, scroll the it at point 2 and adjust as above

Note: if there is no sensor connected to Channel 1 the FREEZE display will return an "ERROR" message.

15.8 Enabling The AUTOTUNE Feature

Note: This feature is available on all ADVANCED equipment except PEGASUS.

The ADVANCED equipment has the ability to AUTOTUNE the control parameters to hone the temperature stability at a specific block temperature. When enabled it will allow the controller to cycle the temperature of the block and calculate the best values for this temperature. After two cycles it will install the calculated values and use these for the control loop.

You are not required to log in to access this feature.

To enable the AUTOTUNE feature:

1. Scroll to the USER ACCESS page
2. Press the Scroll button and then select the AUTOTUNE feature using the down button
3. Press the Scroll button again to highlight the feature
4. Use the up/down button to select ON
5. Press the Scroll button again to enter the value.
6. The controller will now begin the tuning process

During the tuning process, AT can now be seen to the left of the clock on the ISOTECH homepage (figure 3).

To disable the tuning feature during a tune, repeat the process above and select OFF. This will now disable the tune and install the previous values.

15.9 Using the SETPOINT TRIM feature for Offset Elimination

This ADVANCED equipment has the facility to adjust the heat source temperature to a value determined by **Channel1** temperature sensor (only Channel 1 will function with this feature). This allows the user to more accurately bring the block temperature closer to the reference temperature without making any manual adjustments. This value will automatically adjust every 30 minutes and will not adjust to any value outside of ±5°C of the control sensor value. This will prevent overheating in the event of a sensor failure of the sensor being accidently removed from the heat source. In this event the equipment will disable the feature and control in normal mode.

You are not required to log in to access this feature.

To enable the SETPOINT TRIM feature:

1. Ensure a reference sensor is connected to channel 1 and fully immersed into the heat source
2. Scroll to the USER ACCESS page and scroll down to the SETPOINT TRIM box
3. Press the Scroll button to highlight the feature
4. Press the up/down button to change the value to **INPUT 2**
5. Enter this with the Scroll button
6. Exit by pressing the PAGE button and scroll to the homepage

The display may change by the difference between the reference temperature and the control sensor value. This is normal and should not be adjusted.

To exit SETPOINT TRIM mode repeat the process above and enter INPUT 1 and the controller will now function in normal mode.

15.10 How to change the Date and Time or the Language of the ADVANCED equipment

The Date and time of the ADVANCED equipment can be changed to suit local time. This can also incorporate the any daylight saving time in the time zone of your country or region. The display language of some of the display screens can also be change to suit the local language.

The options for this are:

- English
- French
- German
- Italian
- Spanish

Note: Only the Supervisor and Engineer menus will read in the alternative language. The Isotech Home screen will still read in English when this feature is used.

To change the DATE and TIME or LANGUAGE:

- To access these features you will need to log in as the Engineer.
- When logged in, scroll to the INSTRUMENT tab on the Engineer homepage
- Press the SCROLL button to enter
- Scroll to CLOCK and enter by pressing SCROLL button
- Alternatively scroll to LOCALE and enter by pressing SCROLL button
- Adjust as necessary and exit engineer mode

15.11 Thermometer Input Channels

The ADVANCED equipment has three temperature sensor input channels that can be used for either a Platinum Resistance Thermometer or a Thermocouple. Channels 1 and 2 can accept either of these sensors or Channel 3 can accept a Thermocouple.

The thermocouple input connectors used on all three channels have internal cold junction compensation. This means that the thermocouple can plug directly into the Copper connector and the controller will automatically compensate for the cold junction of the thermocouple. Ensure the thermocouple has no additional cold junction as this will introduce errors.

Each of these channels can accept up to eight correction points to improve the linearity of the thermometer accuracy to the Controller display. These are user defined and are unique to only one thermometer.

When using the calibration feature, the points must be used in ascending order, that is to say, the lowest point (Point 1) must be used at the lowest temperature. Each point for the calibration is based on two values: the temperature at which the value is applied (the point) and the value to adjust the temperature by (the offset). The factory default setting for each unused channel is **Point -200** and Offset **0.00**. This means that if the calibration is enabled then the controller will ignore these values until they are populated with real values.

The feature functions in the same way irrespective of sensor type.

The calibration (CAL STATUS) has several settings listed below:

POINTS 1-8: The specific values that are entered to calibrate the thermometer to the controller

ON: Enables the calibration and allows the adjustment of the populated points to function

OFF: Disables the calibration and the channel runs unadjusted

RESET: Erases all existing data for all points (Care must be taken with this as this is not reversible)

15.12 Process to apply a User Calibration to the controller using a PRT connected to Channel 1

1. Connect the thermometer to Channel 1 and ensure the channel is correctly configured using the processes above
2. Ensure the thermometer is correctly inserted to heat source of the ADVANCED equipment
3. Ensure the Calibrated Reference thermometer is placed in the same heat source
4. Allow the system the thermally stabilise
5. Press the PAGE button to enter the SUPERVISOR menu
6. Scroll to the CHANNELS tab and enter with the SCROLL button
7. Select 1 from the list and enter with the SCROLL button
8. Scroll to the ISOTECH tab and enter with the SCROLL button
9. Scroll to CAL STATUS and enter with the SCROLL button
10. Scroll to POINT 1 and enter

The controller is now ready to accept a value. Ensure the equipment is thermally stable, you will now need to use the temperature value displayed by the Calibrated reference thermometer.

11. Record the value on the Calibrated thermometer and scroll to DISPLAY VALUE tab and press enter
12. This will bring up a soft keyboard, use this keyboard to enter the exact temperature displayed by the calibrated standard
13. Press the PAGE button to enter the value, the controller will ask you to confirm the settings. Select YES and enter the value
14. The controller will now accept the value and move to POINT 2 on the display
15. Exit back to the homepage and check the value on the CHANNEL 1 display window
16. When confirmed, move to the next temperature and repeat the process for point 2 and so on

This process is the same for all three channels.

15.13 The NETWORK INTERFACE

Access to the NETWORK interface is available when logged in as the ENGINEER. This will allow adjustment to various network parameters, should they need to be adjusted.

This menu allows writeable access to:

- IP type (FIXED or DYNAMIC (DHCP))
- IP address
- Subnet Mask
- Gateway

and Read only access to:

- MAC address
- Client identifier

15.14 To access the NETWORK INTERFACE

1. Log in as the ENGINEER
2. From the ENGINEER page scroll to NETWORK tab and enter with the SCROLL button
3. Scroll to INTERFACE and enter with the scroll button
4. Scroll to and adjust desired parameter using the pop out soft keyboard

Note: Do not use network cable in excess of 10 metres length.

Use this section in conjunction with **CONNECTING TO A PC**. This provides details of the available software and download details.

15.15 The WEB BROWSER

The ADVANCED equipment has a built in WEB BROWSER that enables access to the equipment either via a local network or over the Internet.

The browser homepage

To open the browser simply open the supported browser (below) and in the address bar type the IP address (see NETWORK INTERFACE) in the format http://XXX.XXX.XXX.XXX

Supported Browsers:

- Google Chrome V22.0 or greater
- Google Mobile Chrome (Android Mobile technology running 'Ice cream sandwich' or greater
- Internet Explorer V9.0 or greater
- Mobile Safari (Apple Mobile technology running IOS 5.0 or greater)

  All files are uploaded from the ADVANCED device to the browser, where all JS and JQuery files are executed locally.

  Browsers should be configured to allow cookies, and support for file caching should also be enabled. If cookies are not enabled this will have the following detrimental effects:
- Any web page configuration changes 'saved' by the user in the client browser will not be retained when navigating between web pages
- For the most efficient browsing make sure that caching is enabled in the browser being used.
- Web server supports standard ASCII character set. Any non-displayable characters will, therefore, be replaced by an asterisk '*'.

The clickable links will allow you to:

- View any active channels via the TRENDING link (including the control sensor)
- View any messages or alarm details via the SUMMARY link
- View individual channels via the settings button in the TRENDING link

Note: The browser is not available when the equipment is in ENGINEERING mode (logged in as the engineer).

15.16 Data Logging

The ADVANCED equipment will always record data for all four channels UNLESS the equipment is in ENGINEERING mode. This is indicated by the green **R** in the bottom left had side of the ISOTECH homepage (figure 3).

The data can either be extracted via the USB socket on the front panel or to a PC by means of the FTP protocol (Remote Archiving) using REVIEW software.

To back up the data via USB stick on the control panel use the following procedure:

1. Log in as the SUPERVISOR
2. Plug a suitable USB memory stick **(8GB maximum)** to the socket on the control panel (figure 1, item 6)
3. Ensure the controller has accepted the memory stick by the icon in the lower left of the ISOTECH homepage (figure 3)
4. Press the page button to scroll to the SUPERVISOR menu
5. Scroll to DEMAND ARCHIVING
6. Scroll to ARCHIVE TO and enter, select USB from the options and enter
7. Scroll to ARCHIVE and select from:
   a. Bring to date
   b. All
   c. Last month

d. Last week
e. Last day
f. Last hour
g. None

8. When the selection is entered by pressing the SCROLL button, the transfer will begin (this may take several minutes depending on the selection made)
9. When the transfer is complete, remove the USB stick and exit SUPERVISOR mode

The data will be stored in a folder called HISTORY.

15.17 FTP Server Archiving

This allows the archiving of recorder files to a remote computer via the RJ45 type connector at the rear of the recorder, either directly or via a network.

In order to carry out a successful transfer:

1. Details of the remote host must be entered in the Network Archive area of configuration
2. The remote computer must be set up as an FTP server. Help from the user's IT department may be necessary in order to achieve this.
3. The remote computer must also be set up to respond to 'pings'. This is because the instrument pings the host whilst establishing connection, if it does not receive a response the archive attempt fails.
4. When accessing files using Microsoft® Internet Explorer, the address (URL) field can be in one of two for-mats:
5. ftp://<instrument IP address>. This allows a user to log in as the anonymous user (if the recorder has any account with the user name set to 'anonymous' with a blank password.
6. ftp://<user name>:<password>@<instrument IP address> to log in as a specific user.

For IE5 users, Microsoft® Internet Explorer displays, by default, history files only. To quit the history folder, either uncheck the Tools/Internet Options/Advanced/Browsing/'Enable folder view for FTP sites' option, or check the Tools/Internet Options/Advanced/Browsing/'Use Web based FTP' option.

15.18 Programmer Function

The ADVANCED equipment has an on-board PROGRAMMER function built in. The PROGRAMMER runs in SEGMENTS and can store up to 100 programs, each containing 25 segments.

This feature is particularly useful for an automated calibration run, the test data can then be extracted and converted to a spreadsheet using the REVIEW software available.

The programs can either be created using the available software, or using the control interface on the ADVANCED equipment.

The software can be downloaded at www.isotech.co.uk/downloads. Once created, a program can be sent directly to the instrument via the network connection or saved to a USB memory stick and imported from there via the USB socket on the controller panel (Fig1, item6).

Instructions and details of installation are supplied with the download.

Note: Channel 2 is disabled on this instrument. Details in the following text appear for information only.

To create, install and run a PROGRAM via the controller interface please follow the instructions below:

See below for a more detailed description of each of the PROGRAM functions.

15.19 Program Details

15.19.1 Operation

This allows the user to select one of the following:

Load. Opens the program store and allows the user to select a program to be loaded.

Store. Allows the current program to be saved to the internal program drive. This is useful if you wish to snapshot the current program and store this under a different program name.

Delete. Allows the selected program to be deleted.

Delete All. Deletes all programs.

Copy. Copies the selected program for 'pasting' either from the internal drive to the USB device, or vice-versa. This is useful if you wish to transfer a program to other ADVANCED instruments.

Copy All. As above, for 'Copy', but copies all the programs in the selected directory.

Note: If a 'Store', 'Copy' or 'Copy All' operation would result in there being a total of more than 100 program files in the internal drive, the operation fails and an error message is displayed.

15.19.2 Status

Success: Previous operation was successful.
Failed: Previous operation failed.
Loading: The program is loading.
Copying: The program copy process is underway.
Deleting: The relevant program is being deleted.

15.19.3 Program

The name of the program currently loaded.

15.19.4 Holdback Style

Appears only if 'Holdback' is enabled. See 'Holdback', below.

15.19.5 Program

Holdback applies to all appropriate segments.
Per Segment: Holdback enabled on a segment by segment basis as described in 'Segment configuration below.

15.19.6 Ch1 Holdback
Appears only if 'Holdback Style' (above) is set to 'Program'.
Off: Holdback is disabled
Low: Holdback is entered when PV < (PSP - Holdback Value)
High: Holdback is entered when PV > (PSP + Holdback Value)
Band: Holdback is entered when PV < (PSP - Holdback Value) or PV > (PSP + Holdback Value)

15.19.7 Ch1 Holdback value
The value to be used in triggering holdback.

15.19.8 Ch2 Holdback
As for Ch1 Holdback, above but for channel 2.

15.19.9 Ch2 Holdback value
As for 'Ch1 Holdback value', above, but for channel 2.

15.19.10 Ramp Style
Ramp style applies to all ramp segments in the program. Ramp Style can be edited only when the program is in Reset mode. Setpoints, rates, times etc. are set in the individual segment configurations
Rate. A Ramp Rate segment is specified by a target set-point and the rate at which to ascend/descend to that set-point.

15.19.11 Time
A Ramp Time segment is specified by a target set-point and a time in which to achieve that set-point.

15.19.12 Ch1 Ramp Units
Select 'Per Second', 'Per Minute' or 'Per Hour' for ramp timing units. Ramp Units can be edited only when the program is in Reset mode.

15.19.13 Ch2 Ramp Units
As for 'Ch1 Ramp Units' above.

15.20 How to create a simple PROGRAM using the controller interface

Below shows a basic PROGRAM that demonstrates the ADVANCED instrument ability to create a program.

Figure 12

Segment	1	2	3	4	5	6	7
Type	Ramp	Dwell	Ramp	Dwell	Ramp	Dwell	End
Ch1 TSP	150	150	300	300	450	450	
Ch1 Time	120	120	120	120	120	120	
Ch1 Holdback	Off	Off	Off	Off	Off	Off	

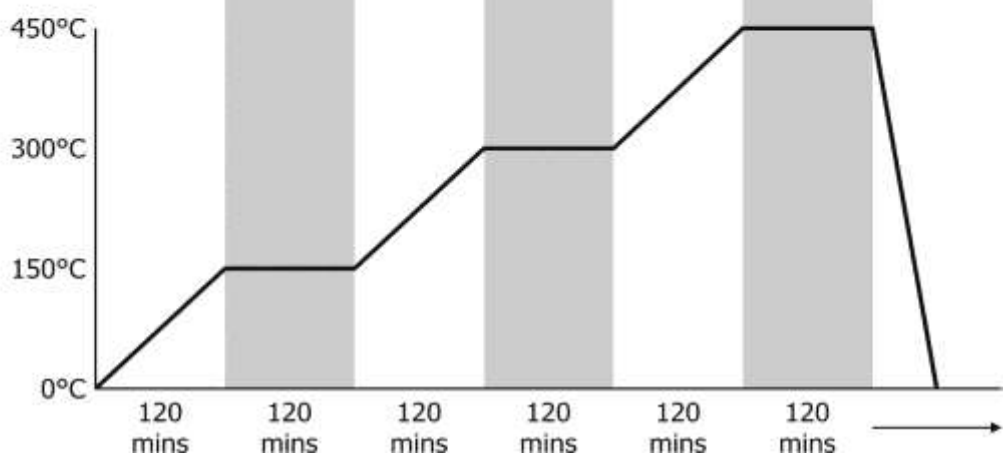

This PROGRAM has 7 segments and these segments are saved as TEST_1 in the memory of the ADVANCED equipment.

It shows the ADVANCED instrument starting with a setpoint of 0.00°C

- It is then set to RAMP to 150°C over a period of 120 minutes
- It is then set to DWELL at this temperature for a period of 120 minutes
- It is then set to RAMP to 300°C over a period of 120 minutes
- It is then set to DWELL at this temperature for a period of 120 minutes
- It is then set to RAMP to 450°C over a period of 120 minutes
- It is then set to DWELL at this temperature for a period of 120 minutes
- It is then set to END and RESET to 0.00°C

15.21 To enable/RUN this PROGRAM

1. Log in as the SUPERVISOR and exit menu
2. Scroll to the PROGRAM page (figure 5)
3. Press the SCROLL button to highlight the RESET box
4. Press the UP button to highlight the PAGE icon in the top right hand side of the screen
5. Enter this with the SCROLL button
6. This will access the PROGRAM EDIT menu page
7. Scroll to OPERATION and select LOAD, enter with the SCROLL button
8. Scroll to TEST_1 and enter with the SCROLL button
9. The STATUS will display SUCCESS and the CURRENT PROGRAM will display TEST_1
10. TEST_1 is now the default program
11. To RUN the program TEST_1 exit the PROGRAM EDIT page using the PAGE button until you see the PROGRAM homepage
12. Press SCROLL once to highlight the RESET box
13. Scroll to TEST_1 and press the SCROLL button to initiate the program

The page will now change to show the current program running, as Fig6 above.

15.22 To edit an existing PROGRAM

1. Follow the above procedure to point 10
2. Scroll down to SEGMENT NUMBER and select the SEGMENT you wish to edit using the SCROLL and UP/DOWN buttons
3. Edit the required parameter (RAMP, DWELL, TIME DURATION etc) using the scroll and UP/DOWN buttons and enter the value
4. When the editing is complete, it can either be left as the existing PROGRAM or saved under an alternative file name in the internal memory
5. To leave the alterations under the existing filename simply exit out of the menu and RUN the program as normal
6. To save as an alternative filename in the memory, SCROLL back up to OPERATION and enter using the SCROLL button
7. Scroll to STORE and enter
8. The soft keyboard will open allowing you to save the file as a filename of your choice
9. When the name is selected, press the PAGE button to save the changes
10. Both the original file and the modified file will now exist in the memory

15.23 Using the HOLDBACK feature

The PROGRAMMER has a HOLDBACK feature available.

Holdback pauses the program (freezes the Programmer setpoint (PSP) and the time remaining parameters) if the difference between the Process value (PV) and the PSP exceeds a user-specified amount (Holdback value). The program remains paused until the PV returns to within the specified deviation.

In ramp or step segments, holdback indicates that the PV is lagging the SP by more than the specified amount and that the program is waiting for the process to catch up. In a dwell segment, holdback is used to guarantee that a work piece stays at set-point within a specified tolerance for the specified dwell duration.

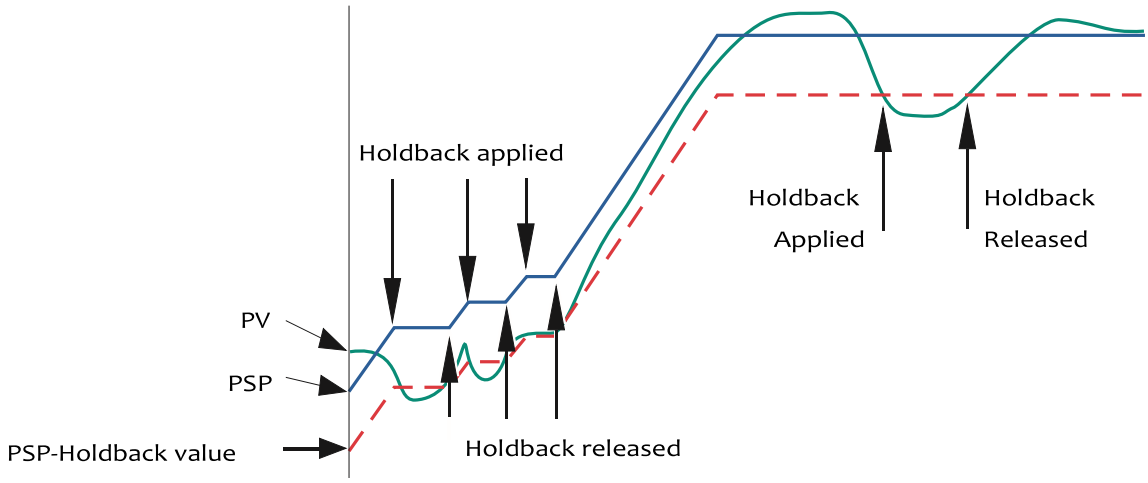

This is particularly useful when running a calibration program as it will allow the heat source to eliminate any "lag" between the controller and the heat source itself.

Holdback can be configured to hold either the segment or the complete program.

The USER defined value is used to define the actual value applied to it.

This can either be:

LOW, where the heat source temperature is below the Setpoint. The programmer will hold the value until the heat source has "caught-up" in temperature.

HIGH, where the heat source temperature is above the Setpoint. The programmer will hold the value until the heat source has "caught-up" in temperature.

BAND, where the heat source is outside a band of temperature around the setpoint

To enable this feature

1. Go to EDIT AN EXISTING PROGRAM and enter the menu
2. Scroll to HOLDBACK STYLE and enter using the SCROLL button
3. Select desired parameter and enter using the SCROLL button
4. Scroll to CH1 HOLDBACK and enter the desired parameter and enter with the SCROLL button
5. Scroll to CH1 HOLDBACK VAL and select the desired temperature, enter using the SCROLL button

16 Connecting Temperature Sensors

16.1 Platinum Resistance Thermometers, PRTs

Set the input type to suit from either the front panel of the Isotech Config Software utility.

PRTs can be connected to Inputs P1 and P2. When connecting a PRT ensure the corresponding thermocouple input is not used, that is if connecting a PRT to Input P1 then Input T1 must not be used, is if connecting a PRT to Input P2 then Input T2 must not be used.

16.2 Input Connections

The five pin cable plug to suit PRTs is part number 935-16-107. These are readily available, suppliers include RS Components (Part Number 129-8573) and Farnell (Part Number 112-2585).

With three wire PRT connections ensure identical lead resistance in all three legs of the connection by using the same length and gauge of cables.

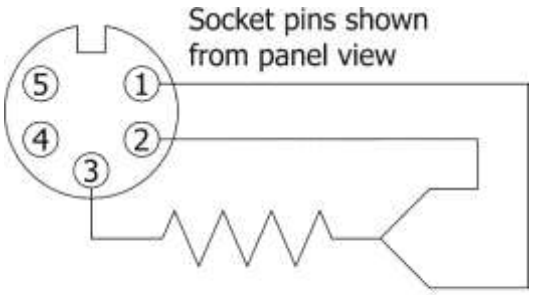

Platinum Resistance
Thermometer Connections

16.3 Connecting Thermocouples

Set the input type to suit from either the front panel of the Isotech Config Software utility.

Thermocouples can be connected to Inputs T1, T2 and T3. When connecting a thermocouple ensure the corresponding PRT input is not used, that is if connecting a thermocouple to Input T1 then Input P1 must not be used, is if connecting a thermocouple to Input T2 then Input P2 must not be used.

Input connectors are the industry standard “miniature thermocouple plugs”.

16.4 Connecting 4 – 20mA Current Transmitters

16.4.1 Using the Current Loop Interface (935-06-161)

This accessory makes it simple to connect and power 4-20mA Transmitters. It includes a 24V DC Power Supply and a 2.49Ω shunt resistor, connected between 0VC and the central connector.

Set the input type to suit from either the front panel of the Isotech Config Software utility.

Connect the current loop interface either Inputs T1 or T2 when connecting ensure the corresponding PRT input is not used, that is if connecting to Input T1 then Input P1 must not be used, is if connecting to Input T2 then Input P2 must not be used.

Connect with the supplied low thermal EMF connecting lead.

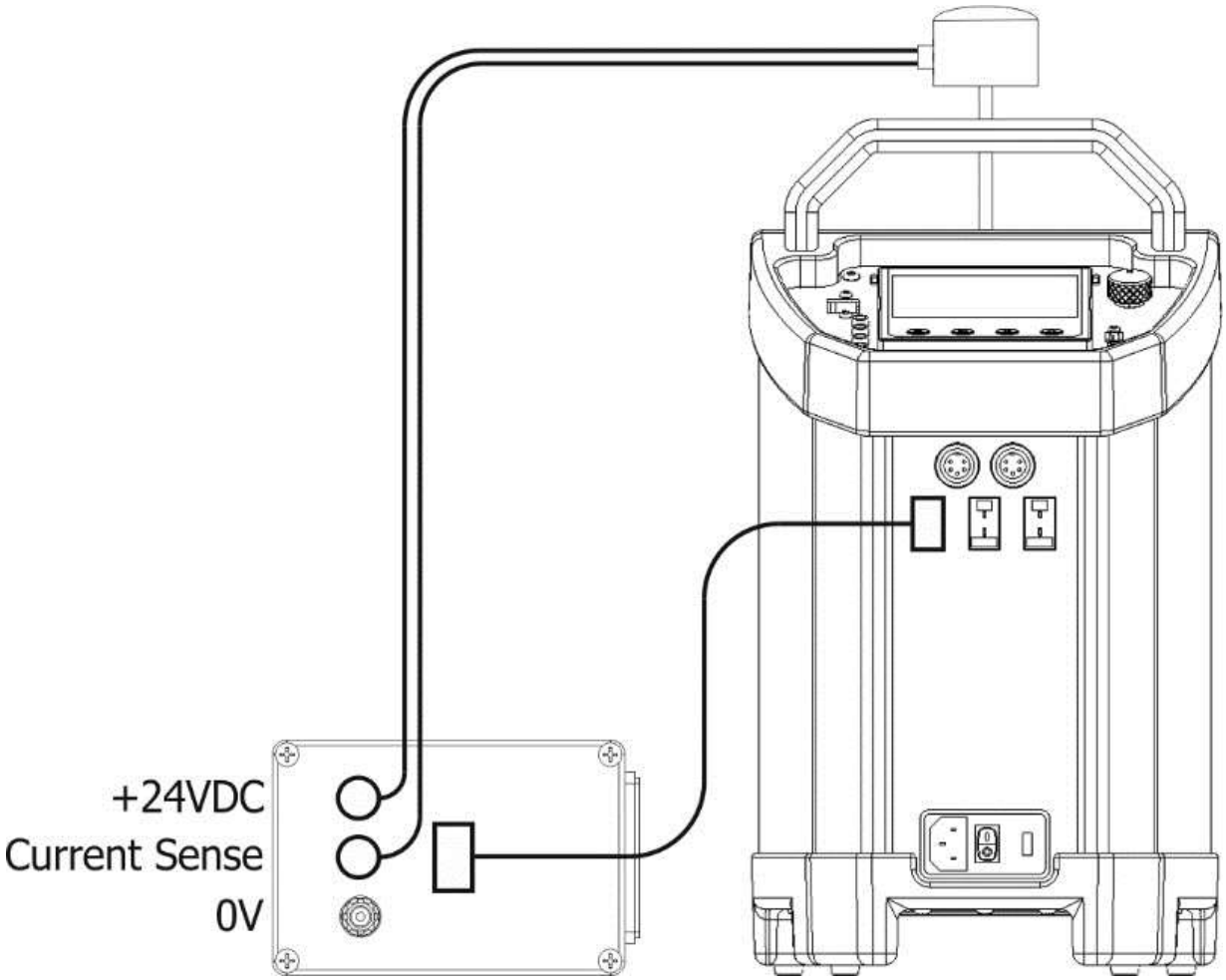

16.4.2 Altering Channel 1 setting to read in mA

- Log in as the engineer and access channel 1 settings as detailed in the manual.
- Scroll to MAIN and change the sensor type to mA.
- Scroll to RESOLUTION and alter the resolution to your requirement.
- Log out.

16.4.3 Altering Channel 1 setting to read in °C

The channel can also be configured to read in true temperature as well. Please see below for example settings

A Pt100 is used to measure a temperature range of 0 to 100°C. This thermometer output is transmitted to the channel by a 4 to 20mA transmitter, for display as a value of temperature.

In Channel 1, set the following for the relevant channel:

- Type = mA
- Units = °C
- Input Low = 4.00
- Input High = 20.00
- Shunt = 2.49 ohms (this is a fixed value for the Current Loop Adapter)
- Lin Type = Pt100
- Range Low = 0
- Range High = 100
- Range Units = °C
- Scale Low = 0
- Scale High = 100

Other items may be left at their defaults.

17 Specification

Model			
Parameter	**Europa 4520**	**Venus 4951**	**Calisto 4953**
Temperature Range	-45°C to 140°C (1)	-35°C to 140°C (2)	30°C to 250°C (3)
Stability: Dry Block / Liquid Bath	±0.01°C		±0.02°C
Display Resolution	0.001°C over the whole range		
Input Channel Accuracy: Thermocouple	E, J, K, N: ±0.2°C at 660°C, R: ±0.6°C, S: ±0.7°C at 660°C, T: ±0.2°C at 150°C		
CJC Accuracy	±0.35°C		
Input Channel Accuracy: RTD	±0.05°C ±0.005% RDG		
Stability	Blackbody ±0.3°C, Surface Sensor ±0.5°C, ITS-90 Cells ±0.0005°C		
Uniformity - Between Wells Dry Block Mode (Radial)	<0.008°C		<0.02°C at 250°C
Uniformity - Lower 40mm (Axial) Dry Block Mode	<0.040°C		<0.25°C
Uniformity - Radial Liquid Bath Mode	<0.02°C		<0.011°C at 250°C
Uniformity - Lower 40mm (Axial) As Liquid Bath	<0.026°C		<0.02°C at 250°C
Heating Time	-30°C to 140°C: 15 Mins		25°C to 250°C: 15 Mins
Cooling Time	140°C to 0°C: 15 Mins		250°C to 30°C: 25 Mins
Calibration Volume	35 x 160mm		
Standard Insert	6 pockets, 2 x 4.5mm, 2 x 6.4mm, 1 x 8.0mm, 1 x 9.5mm diameter, all 157mm deep		
Insert Types	Choice of Three – See Accessories		
	Ethernet – supporting software and USB Host		
CJC Accuracy:	0.35°C		
Dimensions	384H (including handle) x 212W x 312Dmm		
Power	300 Watts		
Voltage	115Vac or 230 Vac 50/60Hz		
Weight	14kg		

1) In ambient of 20°C: Minimum Temperature is 65°C Below Ambient, Absolute Minimum -55°C
(2) In ambient of 20°C: Minimum Temperature is 55°C Below Ambient, Absolute Minimum -45°C
(3) In ambient of 20°C

18 Connecting to a PC

There are several software applications that can be used with the ADVANCED models

18.1 Isotech Config Utility

This application makes it easy to adjust and set the various options such as sensor input types, units, resolution etc.

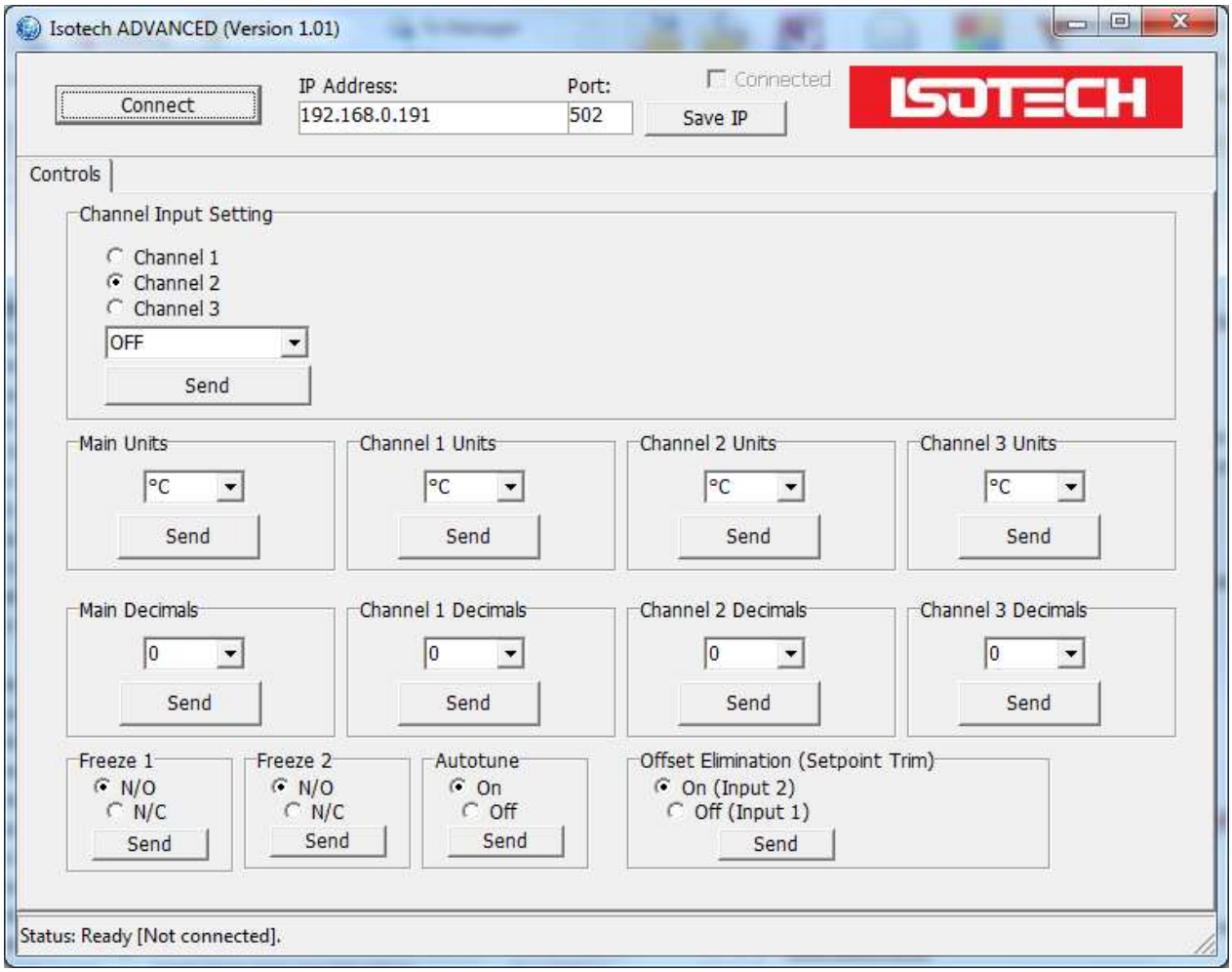

18.2 Isotech I-Cal EASY

This application allows logging of data from the ADVANCED model. Additionally if a license is purchased it allows for fully automatic calibration including certificate printing and the calculation of coefficients.

Refer to the Isotech I-Cal EASY handbook and help system for more details

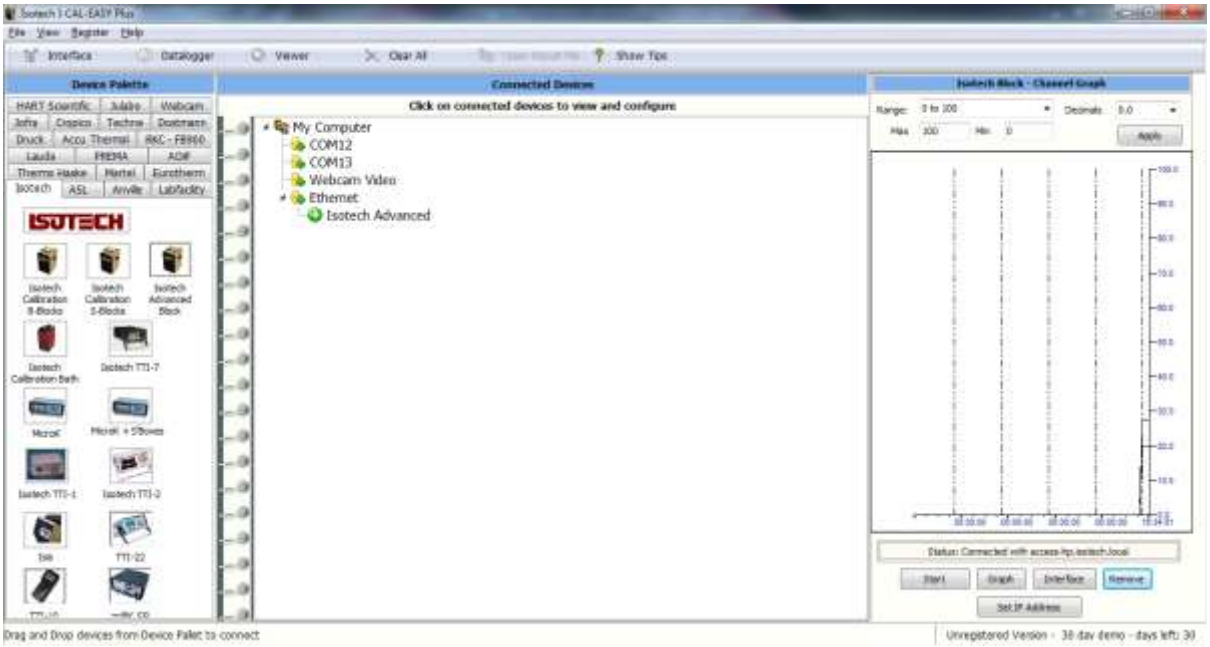

18.3 Program Editor

This allows set point programs to be created on a PC and uploaded to the ADVANCED model

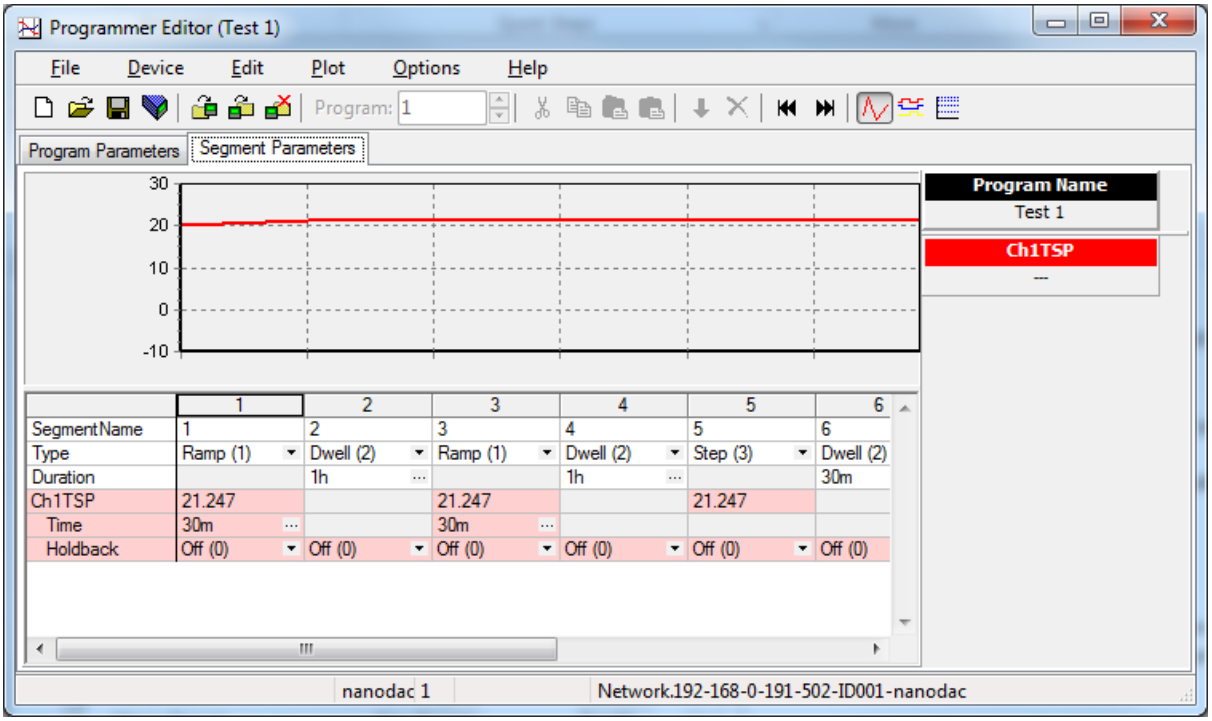

Installation instructions are included with the download

18.4 Review

This is a proprietary software package which allows the user to extract 'archive' data from one or more ADVANCED Dry Blocks and to present this data on a host computer, as if on a chart, or as a spreadsheet.

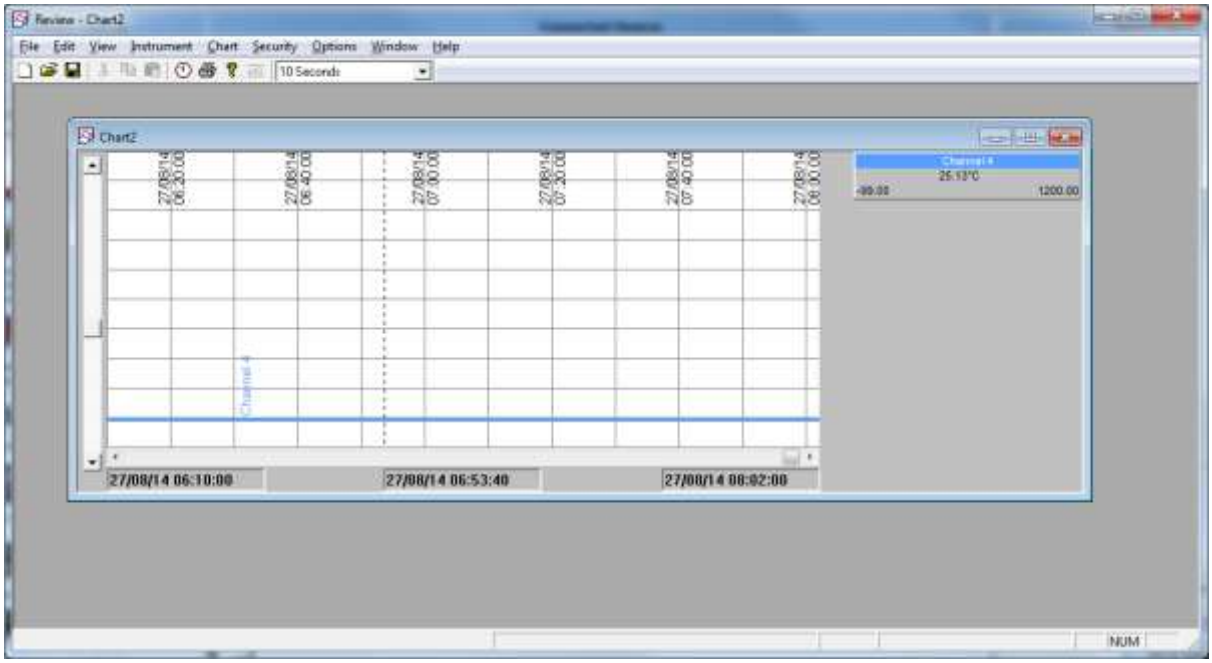

As described in the Review help system, 'Review' allows the user to set up a regular transfer of data (using ftp) from connected instruments into a database on the pc, and then from this database to the chart or spreadsheet. The chart/spreadsheet can be configured to include one or more 'channels' from one or all connected instruments.

It is also possible to archive instrument history files to a memory stick and to use this to transfer the data to the pc.

The user name and password are both 'history and they are not editable.

These applications can be downloaded from the Isotech website
http://www.isotech.co.uk/downloads

Connection to the unit is via the Ethernet interface, configure the IP address to suit your network and then select that IP address in the software. Consult your network manager for assistance if required.

19 Accessories

Dry Block Use	
Standard Dry Block Insert	951-02-15
2 x 4.5mm; 2 x 6.4mm; 1 x 8mm and 1 x 9.5mm	
Dry Block Insert: Type B	951-06-07
1 x 3.5mm; 1 x 5mm; 1 x8mm; 1x 10mm and 1 x 13mm	
Dry Block Insert: Type C	951-06-08
6 x 6.5mm and 1 x 8mm	
Blank Dry Block Insert	951-02-15a
Liquid Bath Use	
Stirred Liquid Container Kit	951-06-01
Liquid in Glass Thermometer Support Kit	951-06-03
Magnetic Followers (Pack of 5)	932-12-55
Blackbody Use	
Blackbody Target Kit	951-06-04
Surface Sensor Use	
Surface Sensor Insert Calibrator Kit	951-06-02
Surface Sensor Insert	951-02-19
ITS-90 Fixed Points	
Slim Gallium Cell	17401M
Slim Water Triple Point Cell (Not Calisto)	B8
Probes	
Standard Probe for On-site Model	935-14-82/DB
Surface Sensor Probe	935-14-83/DB
Current Loop Interface	935-06-161
Carrying Case	931-22-111