DATASHEET

C32.10.PM

Radwag

Distributed by AKRIBIS

radwag.com

C32.10.PM Precision Balance

WL-223-0005

More information on the website
radwag.com/en/info,w1,1YD

The drawings, photos and graphics used are for illustrative purposes only.

Functions

- Labelling
- Plus/Minus Control
- Percent Weighing
- Totalizing
- Parts counting
- Newton unit measurement
- Statistics
- IR sensors
- Under-pan weighing
- GLP Procedures
- Animal weighing
- Density determination
- Replaceable unit
- ALIBI Memory

Datasheet

Metrological parameters	
Maximum capacity [Max]	10 kg
Minimum load	0.5 g
Preload range	1 kg
Readability [d]	0.01 g
Verification unit [e]	0.1 g
Tare range	-10 kg

Metrological parameters	
Minimum weight (USP)	8.2 g
Minimum weight (U=1%, k=2)	0.82 g
Repeatability (Max)	0.01 g
Repeatability (5% Max)	0.0041 g
Linearity	±0.025 g
Stabilization time	1 s
Adjustment	internal (automatic)
OIML Class	II
Physical parameters	
Leveling system	manual
Display	5” graphic colour
Weighing pan dimensions	200×185 mm
Packaging dimensions W x D x H	520×520×280 mm
Net weight	12.6 kg
Gross weight	14.5 kg
Construction	
Protection class	IP 43
Communication interface	
Communication interface	2×RS232, USB-A, USB-B, Ethernet, 4 IN / 4 OUT (digital), Wi-Fi
Electrical parameters	
Power supply	Adapter: 100 – 240V AC 50/60Hz 0.6A; 12V DC 1.2A Balance: 10 – 12V DC 1A max
Environmental conditions	
Operating temperature	+10 – +40 °C

Repeatability is expressed as a standard deviation from 10 weighing cycles.
Stabilization time depends on the ambient conditions and the dynamics of weighing pan loading; specified for FAST profile.
Preload - value equal to ±10% of the maximum load [Max] of the legalised balance. It is possible to start the balance with the mass placed on the pan equal to the maximum preload value.

* Wi-Fi® is a registered trademark of Wi-Fi® Alliance.

Additional fee for verification

Accessories (Additional Fee)

Displays
Antivibration Tables
Power Adapters
RS 232 cables (scale - printer)
Cigarette lighter receptacle power supply cables
Professional Weighing Tables
Barcode scanners
Under-pan weighing
RS 232, RS 485 cables
Stands, wall mounting kits and mounting brackets
Receipt Printer
AP2-1 Current Loop Unit

Software (Additional Fee)

• RAD Key [WX-010-0005]
• Alibi Reader [WX-010-0114]

• R-Lab [WX-010-0080]
• RADWAG Development Studio [WX-010-0104]
• Scale Editor 2.1 [WX-010-0173]
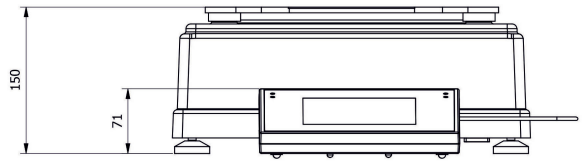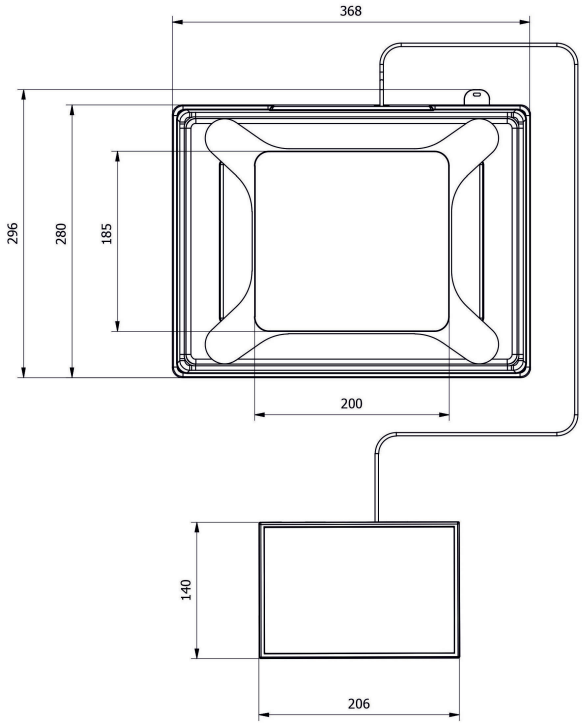
Device dimensions W x D x H